The Positive Mass Theorem, the Penrose Inequality and the Intrinsic Flat Distance

C. Sormani (CUNY)

joint work with S. Wenger (UIC) and D. Lee (CUNY)

The Positive Mass Theorem, the Penrose Inequality and the Intrinsic Flat Distance - - - C. Sormani (CUNY)

Abstract: The Schoen-Yau Positive Mass Theorem states that an asymptotically flat 3 manifold with nonnegative scalar curvature has positive ADM mass unless the manifold is Euclidean space. Here we examine sequences of such manifolds whose ADM mass is approaching 0. We assume the sequences have no interior minimal surfaces although we do allow them to have boundary if it is a minimal surface as is assumed in the Penrose inequality. We conjecture that they converge to Euclidean space in the pointed Intrinsic Flat sense for a well chosen sequence of points. The Intrinsic Flat Distance, introduced in work with Stefan Wenger (UIC), can be estimated using filling manifolds which allow one to control thin wells and small holes. Here we present joint work with Dan Lee (CUNY) constructing such filling manifolds explicitly and proving the conjecture in the rotationally symmetric case.

The Overarching Question:

Positive Mass Theorem: Schoen-Yau 1979, Witten 1981:
If M^3 is a complete asymptotically flat Riemannian manifold with nonnegative scalar curvature, then $m_{ADM}(M^3) \geq 0$.

The Overarching Question:

Positive Mass Theorem: Schoen-Yau 1979, Witten 1981:
If M^3 is a complete asymptotically flat Riemannian manifold with nonnegative scalar curvature, then $m_{ADM}(M^3) \geq 0$.
If $m_{ADM}(M^3) = 0$ then M^3 is isometric to Euclidean space.

The Overarching Question:

Positive Mass Theorem: Schoen-Yau 1979, Witten 1981:
If M^3 is a complete asymptotically flat Riemannian manifold with nonnegative scalar curvature, then $m_{ADM}(M^3) \geq 0$.
If $m_{ADM}(M^3) = 0$ then M^3 is isometric to Euclidean space.

Open Question: If M^3 only has small ADM mass, in what sense is it close to being Euclidean space?

The Overarching Question:

Positive Mass Theorem: Schoen-Yau 1979, Witten 1981:
If M^3 is a complete asymptotically flat Riemannian manifold with nonnegative scalar curvature, then $m_{ADM}(M^3) \geq 0$.
If $m_{ADM}(M^3) = 0$ then M^3 is isometric to Euclidean space.

Open Question: If M^3 only has small ADM mass, in what sense is it close to being Euclidean space?

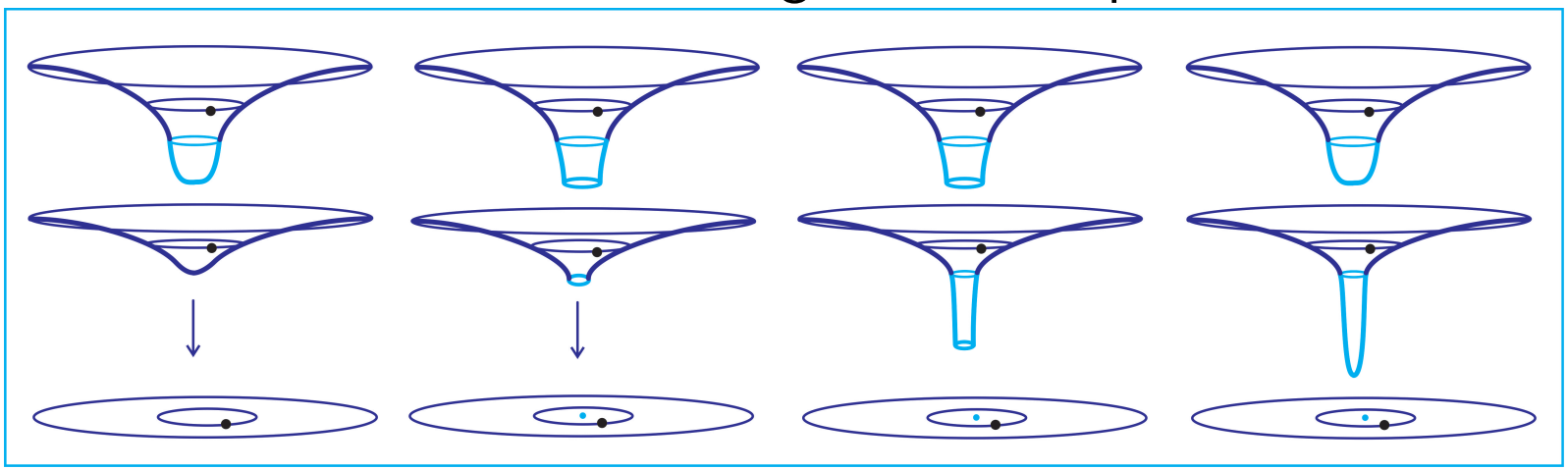

The Overarching Question:

Positive Mass Theorem: Schoen-Yau 1979, Witten 1981:
If M^3 is a complete asymptotically flat Riemannian manifold with nonnegative scalar curvature, then $m_{ADM}(M^3) \geq 0$.
If $m_{ADM}(M^3) = 0$ then M^3 is isometric to Euclidean space.

Open Question: If M^3 only has small ADM mass, in what sense is it close to being Euclidean space?

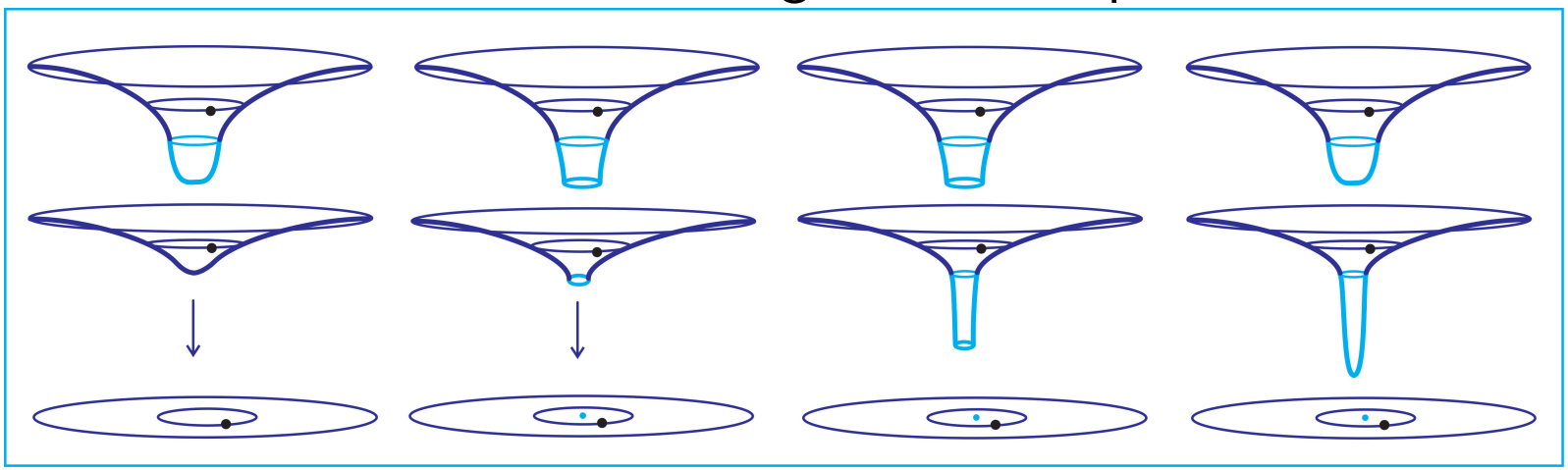

In this talk we make this question more precise, present partial results in this direction and suggest related open problems.

The Overarching Question:

Positive Mass Theorem: Schoen-Yau 1979, Witten 1981:
If M^3 is a complete asymptotically flat Riemannian manifold with nonnegative scalar curvature, then $m_{ADM}(M^3) \geq 0$.
If $m_{ADM}(M^3) = 0$ then M^3 is isometric to Euclidean space.

Open Question: If M^3 only has small ADM mass, in what sense is it close to being Euclidean space?

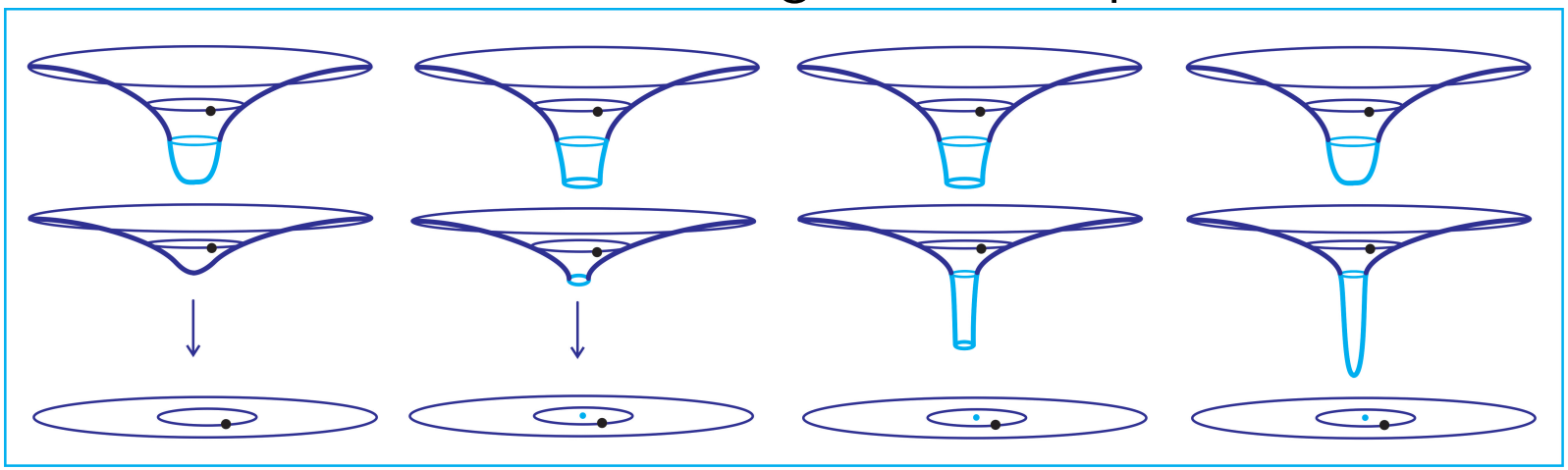

In this talk we make this question more precise, present partial results in this direction and suggest related open problems.

Positive Mass Theorem and Definitions

The ADM mass was introduced by Arnowitt-Deser-Misner in 1961 extending the notion of the mass of Schwarzschild space and gravity wells developed in the rotationally symmetric case by physicists (c.f. Frankel textbook).

Defn: $m_{ADM}(M) = \lim_{\alpha\to\infty} m_H(\Sigma_\alpha)$ where Σ_α are CMC surfaces of area α and $m_H(\Sigma)$ is the Hawking mass,

$$m_H(\Sigma) = \sqrt{\frac{Area(\Sigma)}{16\pi}}\left(1 - \frac{1}{16\pi}\int_\Sigma H^2\, d\sigma\right). \tag{1}$$

Positive Mass Theorem and Definitions

The ADM mass was introduced by Arnowitt-Deser-Misner in 1961 extending the notion of the mass of Schwarzschild space and gravity wells developed in the rotationally symmetric case by physicists (c.f. Frankel textbook).

Defn: $m_{ADM}(M) = \lim_{\alpha\to\infty} m_H(\Sigma_\alpha)$ where Σ_α are CMC surfaces of area α and $m_H(\Sigma)$ is the Hawking mass,

$$m_H(\Sigma) = \sqrt{\frac{Area(\Sigma)}{16\pi}}\left(1 - \frac{1}{16\pi}\int_\Sigma H^2\, d\sigma\right). \tag{1}$$

In the rotationally symmetric case, with metric $ds^2 + f^2(s)g_0$:

$$m_H'(s) = f^2(s)f'(s)R/4 \text{ where } R \text{ is the scalar curvature.} \tag{2}$$

So the Hawking mass is monotone when $R \geq 0$ and $f' \geq 0$.

Positive Mass Theorem and Definitions

The ADM mass was introduced by Arnowitt-Deser-Misner in 1961 extending the notion of the mass of Schwarzschild space and gravity wells developed in the rotationally symmetric case by physicists (c.f. Frankel textbook).

Defn: $m_{ADM}(M) = \lim_{\alpha\to\infty} m_H(\Sigma_\alpha)$ where Σ_α are CMC surfaces of area α and $m_H(\Sigma)$ is the Hawking mass,

$$m_H(\Sigma) = \sqrt{\frac{Area(\Sigma)}{16\pi}}\left(1 - \frac{1}{16\pi}\int_\Sigma H^2\, d\sigma\right). \tag{1}$$

In the rotationally symmetric case, with metric $ds^2 + f^2(s)g_0$:

$$m_H'(s) = f^2(s)f'(s)R/4 \text{ where } R \text{ is the scalar curvature.} \tag{2}$$

So the Hawking mass is monotone when $R \geq 0$ and $f' \geq 0$.

Without rotational symmetry, one may use inverse mean curvature flow to obtain a family Σ_s with nondecreasing Hawking mass. This provides a new proof of the Positive Mass Theorem [Geroch 1973, Huisken-Ilmanen 2001].

Constructing Rotationally Symmetric Examples:

These examples can always be viewed as submanifolds of $\mathbb{E}^4$.

Constructing Rotationally Symmetric Examples:

These examples can always be viewed as submanifolds of $\mathbb{E}^4$.

When the Hawking mass is constant, $m_H(s) = m$, then

if $m = 0$, the manifold is Euclidean space $\{z = 0\}$ and

if $m > 0$ the manifold is Schwarzschild space $\left\{r = \frac{z^2}{8m} + 2m\right\}$.

Constructing Rotationally Symmetric Examples:

These examples can always be viewed as submanifolds of $\mathbb{E}^4$.

When the Hawking mass is constant, $m_H(s) = m$, then

if $m = 0$, the manifold is Euclidean space $\{z = 0\}$ and

if $m > 0$ the manifold is Schwarzschild space $\left\{r = \frac{z^2}{8m} + 2m\right\}$.

One may prescribe any nondecreasing Hawking mass:

starting at some $r_{min} \geq 0$ with $m_H(r_{min}) = 4\pi r_{min}^2$:

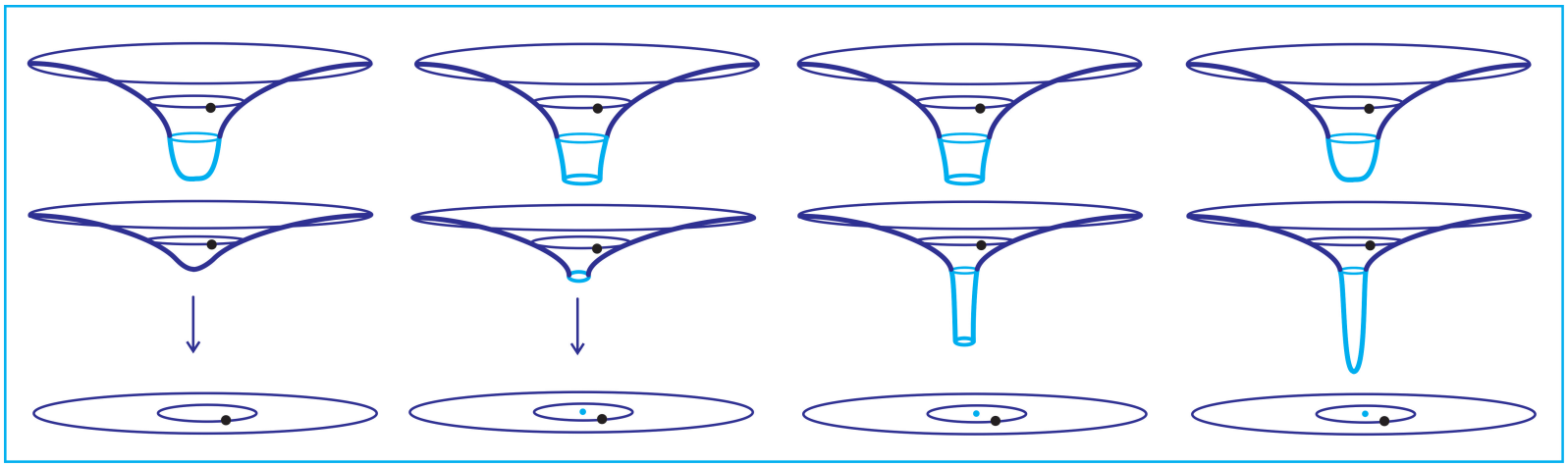

We have gravity wells when $r_{min} = 0$ and apparent horizons when $r_{min} > 0$. They may be arbitrarily deep even for small ADM mass.

The Penrose Inequality

Huisken-Ilmanen, Bray 2001: If M^3 is asymptotically flat with nonnegative scalar curvature with no interior minimal surfaces whose boundary is minimal, then

$$m_{ADM}(M^3) \geq m_H(\partial M^3) = \sqrt{\frac{Area(\partial M^3)}{16\pi}}. \tag{3}$$

If there is equality, then M^3 is isometric to Schwarzschild space.

The Penrose Inequality

Huisken-Ilmanen, Bray 2001: If M^3 is asymptotically flat with nonnegative scalar curvature with no interior minimal surfaces whose boundary is minimal, then

$$m_{ADM}(M^3) \geq m_H(\partial M^3) = \sqrt{\frac{Area(\partial M^3)}{16\pi}}. \tag{3}$$

If there is equality, then M^3 is isometric to Schwarzschild space.
Why no interior minimal surfaces (horizons)?
Otherwise one create counterexamples with a series of horizons.

The Penrose Inequality

Huisken-Ilmanen, Bray 2001: If M^3 is asymptotically flat with nonnegative scalar curvature with no interior minimal surfaces whose boundary is minimal, then

$$m_{ADM}(M^3) \geq m_H(\partial M^3) = \sqrt{\frac{Area(\partial M^3)}{16\pi}}. \tag{3}$$

If there is equality, then M^3 is isometric to Schwarzschild space.
Why no interior minimal surfaces (horizons)?
Otherwise one create counterexamples with a series of horizons.
Anything can be hidden behind horizons
when studying manifolds of small ADM mass as well.
So we avoid interior horizons in the statement of our main theorem...

Main Theorem

Lee-S—: Suppose M_j^3 are rotationally symmetric manifolds with no interior minimal surfaces, nonnegative scalar curvature and either $\partial M_j = \emptyset$ or ∂M_j a minimal surface.
Fixing an $\alpha_0 > 0$ and $D > 0$, if $m_{ADM}(M_j) \to 0$ then

$$T_D(\Sigma_{\alpha_0}) \subset M_j^3 \text{ converges to } T_D(\Sigma_{\alpha_0}) \subset \mathbb{E}^3$$

in the Intrinsic Flat Sense where Σ_{α_0} is CMC with $A(\Sigma_{\alpha_0}) = \alpha_0$.

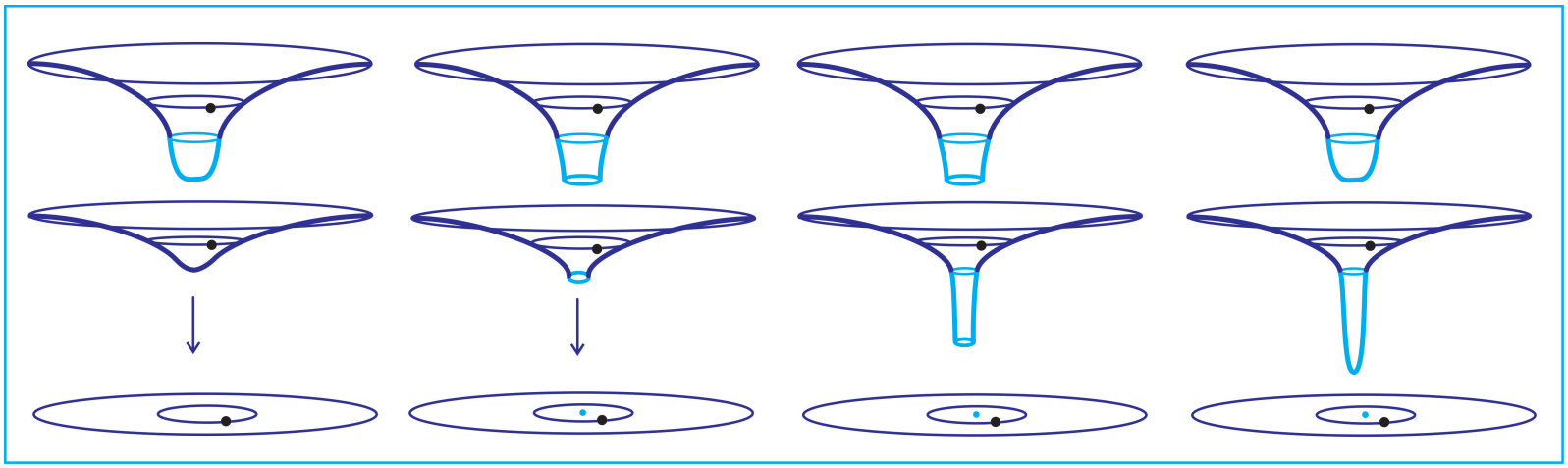

The intrinsic flat distance estimates the distances between manifolds by filling in the space "between" them and measuring the volume of the space. [S—Wenger, JDG 2011]

Main Theorem

Lee-S—: Suppose M_j^3 are rotationally symmetric manifolds with no interior minimal surfaces, nonnegative scalar curvature and either $\partial M_j = \emptyset$ or ∂M_j a minimal surface.
Fixing an $\alpha_0 > 0$ and $D > 0$, if $m_{ADM}(M_j) \to 0$ then

$$T_D(\Sigma_{\alpha_0}) \subset M_j^3 \text{ converges to } T_D(\Sigma_{\alpha_0}) \subset \mathbb{E}^3$$

in the Intrinsic Flat Sense where Σ_{α_0} is CMC with $A(\Sigma_{\alpha_0}) = \alpha_0$.

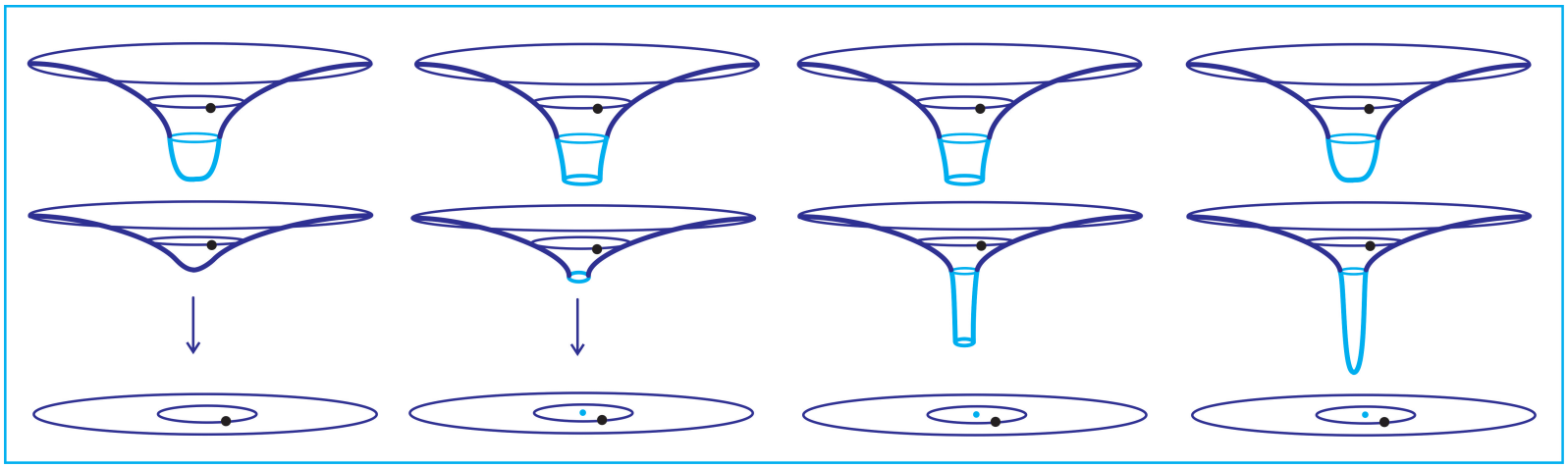

The intrinsic flat distance estimates the distances between manifolds by filling in the space "between" them and measuring the volume of the space. [S—Wenger, JDG 2011]

Main Theorem

Lee-S—: Suppose M_j^3 are rotationally symmetric manifolds with no interior minimal surfaces, nonnegative scalar curvature and either $\partial M_j = \emptyset$ or ∂M_j a minimal surface.
Fixing an $\alpha_0 > 0$ and $D > 0$, if $m_{ADM}(M_j) \to 0$ then

$$T_D(\Sigma_{\alpha_0}) \subset M_j^3 \text{ converges to } T_D(\Sigma_{\alpha_0}) \subset \mathbb{E}^3$$

in the Intrinsic Flat Sense where Σ_{α_0} is CMC with $A(\Sigma_{\alpha_0}) = \alpha_0$.

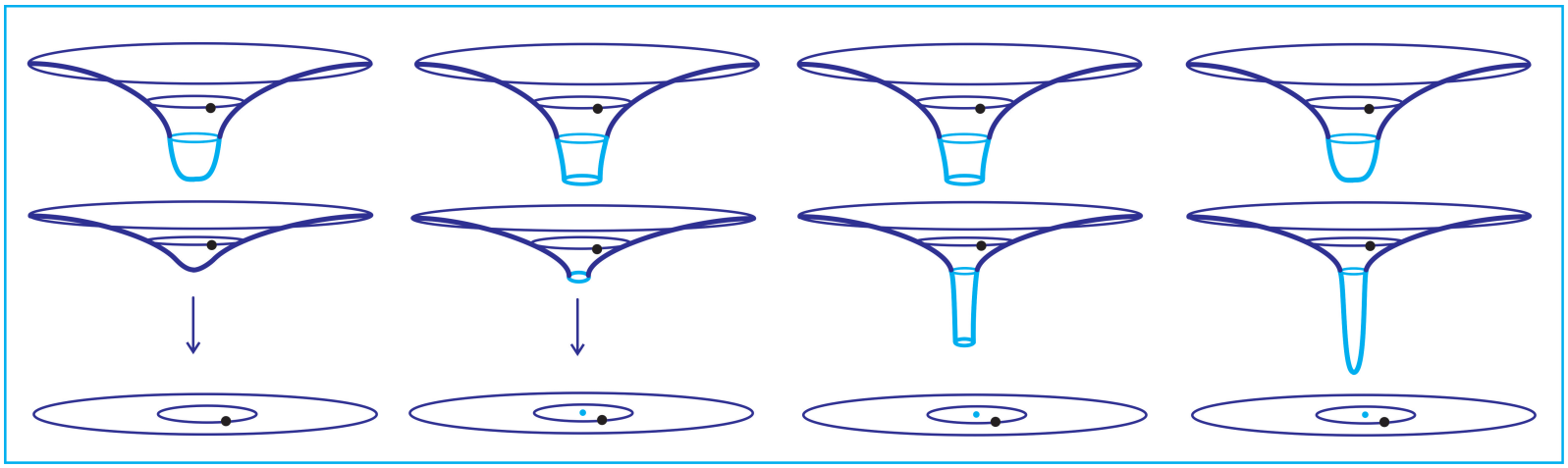

The intrinsic flat distance estimates the distances between manifolds by filling in the space "between" them and measuring the volume of the space. [S—Wenger, JDG 2011]

Main Theorem

Lee-S—: Suppose M_j^3 are rotationally symmetric manifolds with no interior minimal surfaces, nonnegative scalar curvature and either $\partial M_j = \emptyset$ or ∂M_j a minimal surface.
Fixing an $\alpha_0 > 0$ and $D > 0$, if $m_{ADM}(M_j) \to 0$ then

$$T_D(\Sigma_{\alpha_0}) \subset M_j^3 \text{ converges to } T_D(\Sigma_{\alpha_0}) \subset \mathbb{E}^3$$

in the Intrinsic Flat Sense where Σ_{α_0} is CMC with $A(\Sigma_{\alpha_0}) = \alpha_0$.

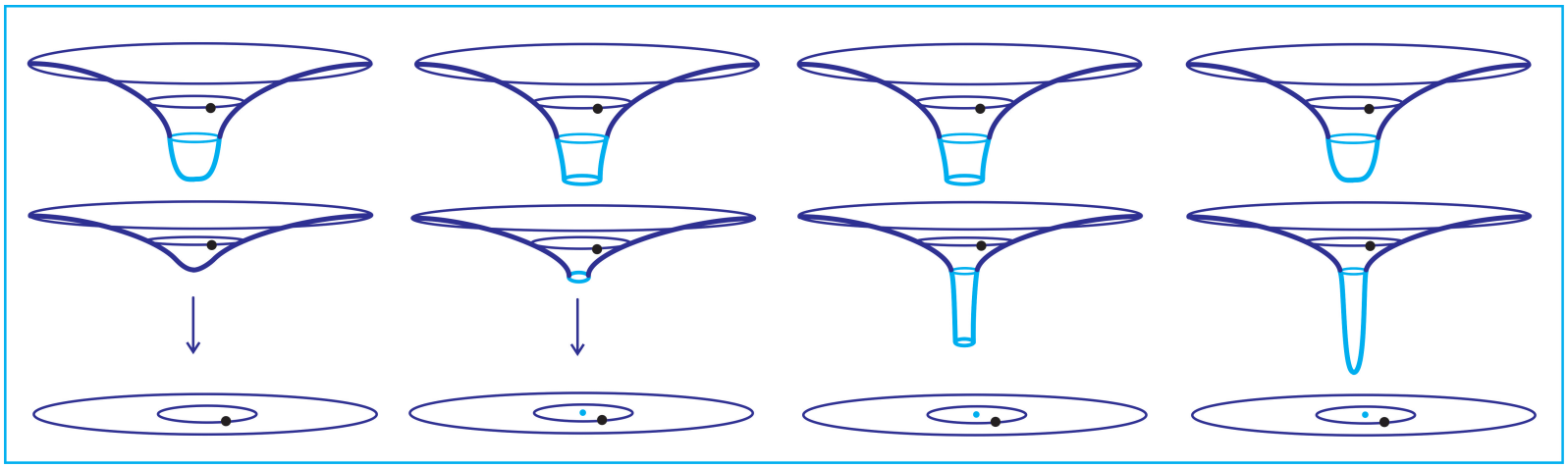

The intrinsic flat distance estimates the distances between manifolds by filling in the space "between" them and measuring the volume of the space. [S—Wenger, JDG 2011]

Constructing Arbitrarily Many Wells

Without rotationally symmetry, one may have many more wells of arbitrary depth becoming arbitrarily dense [Lee-S—, ArXiV] (draw)

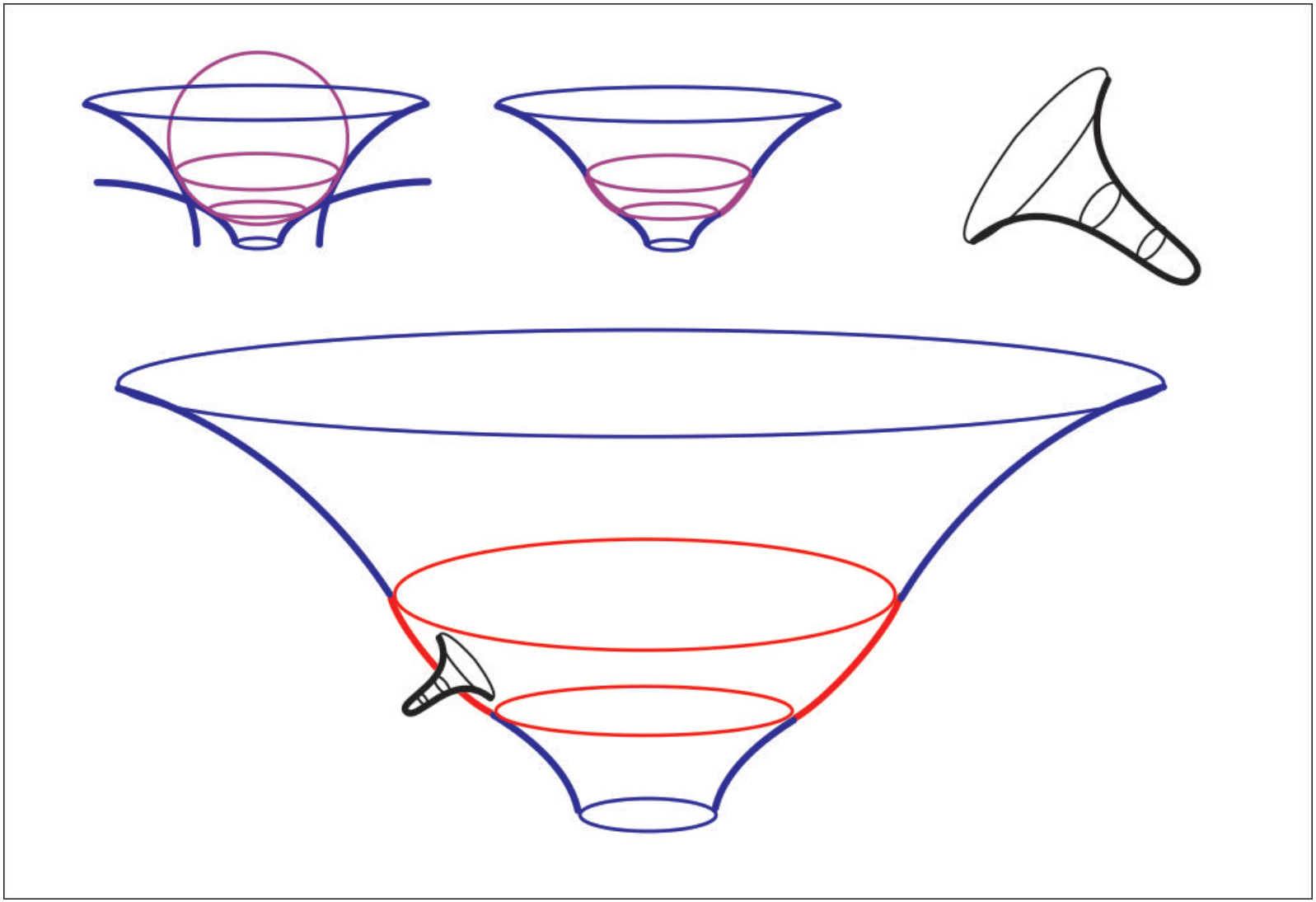

Nevertheless we believe the Main Theorem extends...

The Main Conjecture

Suppose M_j^3 are asymptotically flat Riemannian manifolds with no interior minimal surfaces, nonnegative scalar curvature and either $\partial M_j = \emptyset$ or ∂M_j a minimal surface.
Fixing an $\alpha_0 > 0$ and $D > 0$, if $m_{ADM}(M_j) \to 0$ then

$$T_D(\Sigma_{\alpha_0}) \subset M_j^3 \text{ converges to } T_D(\Sigma_{\alpha_0}) \subset \mathbb{E}^3$$

in the Intrinsic Flat Sense where Σ_{α_0} is CMC with $A(\Sigma_{\alpha_0}) = \alpha_0$.

The Main Conjecture

Suppose M_j^3 are asymptotically flat Riemannian manifolds with no interior minimal surfaces, nonnegative scalar curvature and either $\partial M_j = \emptyset$ or ∂M_j a minimal surface.
Fixing an $\alpha_0 > 0$ and $D > 0$, if $m_{ADM}(M_j) \to 0$ then

$$T_D(\Sigma_{\alpha_0}) \subset M_j^3 \text{ converges to } T_D(\Sigma_{\alpha_0}) \subset \mathbb{E}^3$$

in the Intrinsic Flat Sense where Σ_{α_0} is CMC with $A(\Sigma_{\alpha_0}) = \alpha_0$.

Throughout the talk we will discuss approaches to this conjecture. Special cases of the conjecture may be easier to prove and are listed in [Lee-S— ArXiV].

The Main Conjecture

Suppose M_j^3 are asymptotically flat Riemannian manifolds with no interior minimal surfaces, nonnegative scalar curvature and either $\partial M_j = \emptyset$ or ∂M_j a minimal surface.
Fixing an $\alpha_0 > 0$ and $D > 0$, if $m_{ADM}(M_j) \to 0$ then

$$T_D(\Sigma_{\alpha_0}) \subset M_j^3 \text{ converges to } T_D(\Sigma_{\alpha_0}) \subset \mathbb{E}^3$$

in the Intrinsic Flat Sense where Σ_{α_0} is CMC with $A(\Sigma_{\alpha_0}) = \alpha_0$.

Throughout the talk we will discuss approaches to this conjecture. Special cases of the conjecture may be easier to prove and are listed in [Lee-S— ArXiV].
At the end of the talk special cases will be discussed and different possible ways of redefining Σ will be described.

The Main Conjecture

Suppose M_j^3 are asymptotically flat Riemannian manifolds with no interior minimal surfaces, nonnegative scalar curvature and either $\partial M_j = \emptyset$ or ∂M_j a minimal surface.
Fixing an $\alpha_0 > 0$ and $D > 0$, if $m_{ADM}(M_j) \to 0$ then

$$T_D(\Sigma_{\alpha_0}) \subset M_j^3 \text{ converges to } T_D(\Sigma_{\alpha_0}) \subset \mathbb{E}^3$$

in the Intrinsic Flat Sense where Σ_{α_0} is CMC with $A(\Sigma_{\alpha_0}) = \alpha_0$.

Throughout the talk we will discuss approaches to this conjecture. Special cases of the conjecture may be easier to prove and are listed in [Lee-S— ArXiV].
At the end of the talk special cases will be discussed and different possible ways of redefining Σ will be described.
An attempt to produce a counter example could involve a construction where the total volumes of wells becomes large.

Outline of the Talk

* Review Stability Theorems and Convergence of Manifolds
* Introduce Intrinsic Flat Distance applying Currents on Metric Spaces by Ambrosio-Kirchheim Acta-2000 (joint with Stefan Wenger, JDG-2011)
* Review Techniques for Estimating the Intrinsic Flat Distance using only Riemannian Geometry (joint with Dan Lee, on arxiv)
* Apply the Intrinsic Flat Distance to prove Main Theorem (joint with Dan Lee, on arxiv)
* Approaches to the Main Conjecture and Related Open Problems (joint with Dan Lee, arxiv)
* Almost Inequality in the Penrose Equality (joint with Dan Lee, to appear)

Links to all papers related to the Intrinsic Flat Distance are on http://comet.lehman.cuny.edu/sormani/intrinsicflat.html

Rigidity and Stability Theorems

Rigidity Theorem: A manifold, M, with certain given properties such that some quantity $F(M) = 0$ is isometric to another manifold M_0.

Stability Theorem: A manifold, M, with the same given properties such that $F(M) < \epsilon$ is close to this M_0 with respect to some distance between manifolds.

Rigidity and Stability Theorems

Rigidity Theorem: A manifold, M, with certain given properties such that some quantity $F(M) = 0$ is isometric to another manifold M_0.

Stability Theorem: A manifold, M, with the same given properties such that $F(M) < \epsilon$ is close to this M_0 with respect to some distance between manifolds.

Method I: Explicitly estimate the distance between M and M_0.

Rigidity and Stability Theorems

Rigidity Theorem: A manifold, M, with certain given properties such that some quantity $F(M) = 0$ is isometric to another manifold M_0.

Stability Theorem: A manifold, M, with the same given properties such that $F(M) < \epsilon$ is close to this M_0 with respect to some distance between manifolds.

Method I: Explicitly estimate the distance between M and M_0.
(c.f. Cheeger-Colding Annals 1996, Lee-S— ArXiV 2011)

Rigidity and Stability Theorems

Rigidity Theorem: A manifold, M, with certain given properties such that some quantity $F(M) = 0$ is isometric to another manifold M_0.

Stability Theorem: A manifold, M, with the same given properties such that $F(M) < \epsilon$ is close to this M_0 with respect to some distance between manifolds.

Method I: Explicitly estimate the distance between M and M_0.
(c.f. Cheeger-Colding Annals 1996, Lee-S— ArXiV 2011)

Method II: Take a sequence of M_j with $F(M_j) \to 0$, apply a compactness theorem to show a limit, M_∞ exists, prove that in some sense $F(M_\infty) = 0$ and extend the Rigidity Theorem to the class of limit spaces and prove M_∞ is isometric to M_0.

Rigidity and Stability Theorems

Rigidity Theorem: A manifold, M, with certain given properties such that some quantity $F(M) = 0$ is isometric to another manifold M_0.

Stability Theorem: A manifold, M, with the same given properties such that $F(M) < \epsilon$ is close to this M_0 with respect to some distance between manifolds.

Method I: Explicitly estimate the distance between M and M_0.

(c.f. Cheeger-Colding Annals 1996, Lee-S— ArXiV 2011)

Method II: Take a sequence of M_j with $F(M_j) \to 0$, apply a compactness theorem to show a limit, M_∞ exists, prove that in some sense $F(M_\infty) = 0$ and extend the Rigidity Theorem to the class of limit spaces and prove M_∞ is isometric to M_0.

(c.f. Cheeger-Colding JDG 1997, S— GAFA 2004)

Rigidity and Stability Theorems

Rigidity Theorem: A manifold, M, with certain given properties such that some quantity $F(M) = 0$ is isometric to another manifold M_0.

Stability Theorem: A manifold, M, with the same given properties such that $F(M) < \epsilon$ is close to this M_0 with respect to some distance between manifolds.

Method I: Explicitly estimate the distance between M and M_0.

(c.f. Cheeger-Colding Annals 1996, Lee-S— ArXiV 2011)

Method II: Take a sequence of M_j with $F(M_j) \to 0$, apply a compactness theorem to show a limit, M_∞ exists, prove that in some sense $F(M_\infty) = 0$ and extend the Rigidity Theorem to the class of limit spaces and prove M_∞ is isometric to M_0.

(c.f. Cheeger-Colding JDG 1997, S— GAFA 2004)

Although we use Method I to prove the Main Theorem and it may be helpful for proving other special cases, Method II may be needed to prove the Main Conjecture in general.

Convergence of Riemannian Manifolds: $M_j \to M_\infty$

$C^{1,\alpha}$ Smooth Convergence :

Limits M_∞ are $C^{1,\alpha}$ manifolds diffeomorphic to the sequence

Convergence of Riemannian Manifolds: $M_j \to M_\infty$

$C^{1,\alpha}$ Smooth Convergence :

Limits M_∞ are $C^{1,\alpha}$ manifolds diffeomorphic to the sequence

Cheeger Compactness:

$|sect(M_j)| \leq \Lambda,\ vol(M_j) \geq V_0,\ diam(M_j) \leq D$

Convergence of Riemannian Manifolds: $M_j \to M_\infty$

$C^{1,\alpha}$ Smooth Convergence :

Limits M_∞ are $C^{1,\alpha}$ manifolds diffeomorphic to the sequence

Cheeger Compactness:

$|sect(M_j)| \leq \Lambda,\ vol(M_j) \geq V_0,\ diam(M_j) \leq D$

Gromov-Hausdorff Convergence :

Limits are compact geodesic metric spaces.

Topology and dimension can change in the limit.

Convergence of Riemannian Manifolds: $M_j \to M_\infty$

$C^{1,\alpha}$ Smooth Convergence :

Limits M_∞ are $C^{1,\alpha}$ manifolds diffeomorphic to the sequence

Cheeger Compactness:

$|sect(M_j)| \leq \Lambda,\ vol(M_j) \geq V_0,\ diam(M_j) \leq D$

Gromov-Hausdorff Convergence :

Limits are compact geodesic metric spaces.

Topology and dimension can change in the limit.

Gromov Compactness: $Ric(M_j) \geq -\Lambda,\ diam(M_j) \leq D$.

Convergence of Riemannian Manifolds: $M_j \to M_\infty$

$C^{1,\alpha}$ Smooth Convergence :

Limits M_∞ are $C^{1,\alpha}$ manifolds diffeomorphic to the sequence

Cheeger Compactness:

$|sect(M_j)| \leq \Lambda,\ vol(M_j) \geq V_0,\ diam(M_j) \leq D$

Gromov-Hausdorff Convergence :

Limits are compact geodesic metric spaces.

Topology and dimension can change in the limit.

Gromov Compactness: $Ric(M_j) \geq -\Lambda,\ diam(M_j) \leq D$.

S—Wenger Intrinsic Flat Convergence:

Limits are Integral Current Spaces possibly the 0 space.

They are weighted oriented and countably $\mathcal{H}^m$ rectifiable.

Convergence of Riemannian Manifolds: $M_j \to M_\infty$

$C^{1,\alpha}$ Smooth Convergence :

Limits M_∞ are $C^{1,\alpha}$ manifolds diffeomorphic to the sequence

Cheeger Compactness:

$|sect(M_j)| \leq \Lambda,\ vol(M_j) \geq V_0,\ diam(M_j) \leq D$

Gromov-Hausdorff Convergence :

Limits are compact geodesic metric spaces.

Topology and dimension can change in the limit.

Gromov Compactness: $Ric(M_j) \geq -\Lambda,\ diam(M_j) \leq D$.

S—Wenger Intrinsic Flat Convergence:

Limits are Integral Current Spaces possibly the 0 space.

They are weighted oriented and countably $\mathcal{H}^m$ rectifiable.

Wenger Compactness:

$diam(M_j) \leq D,\ vol(M_j) \leq V,\ vol(\partial M_j) \leq A$

Convergence of Riemannian Manifolds: $M_j \to M_\infty$

$C^{1,\alpha}$ Smooth Convergence :

Limits M_∞ are $C^{1,\alpha}$ manifolds diffeomorphic to the sequence

Cheeger Compactness:

$|sect(M_j)| \leq \Lambda,\ vol(M_j) \geq V_0,\ diam(M_j) \leq D$

Gromov-Hausdorff Convergence :

Limits are compact geodesic metric spaces.

Topology and dimension can change in the limit.

Gromov Compactness: $Ric(M_j) \geq -\Lambda,\ diam(M_j) \leq D$.

S—Wenger Intrinsic Flat Convergence:

Limits are Integral Current Spaces possibly the 0 space.

They are weighted oriented and countably $\mathcal{H}^m$ rectifiable.

Wenger Compactness:

$diam(M_j) \leq D,\ vol(M_j) \leq V,\ vol(\partial M_j) \leq A$

Survey "How Riemannian Manifolds Converge" S—ArXiV 2010

Convergence of Riemannian Manifolds: $M_j \to M_\infty$

$C^{1,\alpha}$ Smooth Convergence :
Limits M_∞ are $C^{1,\alpha}$ manifolds diffeomorphic to the sequence
Cheeger Compactness:
$|sect(M_j)| \leq \Lambda,\ vol(M_j) \geq V_0,\ diam(M_j) \leq D$

Gromov-Hausdorff Convergence :
Limits are compact geodesic metric spaces.
Topology and dimension can change in the limit.
Gromov Compactness: $Ric(M_j) \geq -\Lambda,\ diam(M_j) \leq D$.

S—Wenger Intrinsic Flat Convergence:
Limits are Integral Current Spaces possibly the 0 space.
They are weighted oriented and countably $\mathcal{H}^m$ rectifiable.
Wenger Compactness:
$diam(M_j) \leq D,\ vol(M_j) \leq V,\ vol(\partial M_j) \leq A$

Survey "How Riemannian Manifolds Converge" S—ArXiV 2010
Open question: develop useful new notions of convergence.

Smooth Convergence

Defn: A sequence of Riemannian manifolds, M_j, converges smoothly in the $C^{k,\alpha}$ sense to a limit space M_∞, if there exists $C^{k,\alpha}$ diffeomorphisms, $f_j : M_\infty \to M_j$ such that $|f_j^* g_j - g_\infty|_{C^{1,\alpha}(M_\infty)} \to 0$.

Cheeger Compactness:
M_j with uniform sectional curvature bounds $|sect| \leq \Lambda$, uniform volume bounds, $vol \geq V_0$ and uniform diameter bounds $diam \leq D$ have subsequences which converge in the $C^{1,\alpha}$ sense.

Smooth Convergence

Defn: A sequence of Riemannian manifolds, M_j, converges smoothly in the $C^{k,\alpha}$ sense to a limit space M_∞, if there exists $C^{k,\alpha}$ diffeomorphisms, $f_j : M_\infty \to M_j$ such that $|f_j^* g_j - g_\infty|_{C^{1,\alpha}(M_\infty)} \to 0$.

Cheeger Compactness:
M_j with uniform sectional curvature bounds $|sect| \leq \Lambda$, uniform volume bounds, $vol \geq V_0$ and uniform diameter bounds $diam \leq D$ have subsequences which converge in the $C^{1,\alpha}$ sense.

Smooth Convergence and the Positive Mass Theorem

Smooth Convergence and the Positive Mass Theorem

Corvino: assuming sectional curvature bounds M_j converge smoothly to $\mathbb{E}^3$ when $m_{ADM}(M_j) \to 0$ [ProcAMS-2005].

Smooth Convergence and the Positive Mass Theorem

Corvino: assuming sectional curvature bounds M_j converge smoothly to $\mathbb{E}^3$ when $m_{ADM}(M_j) \to 0$ [ProcAMS-2005].

In general no smooth convergence (last 3 columns):

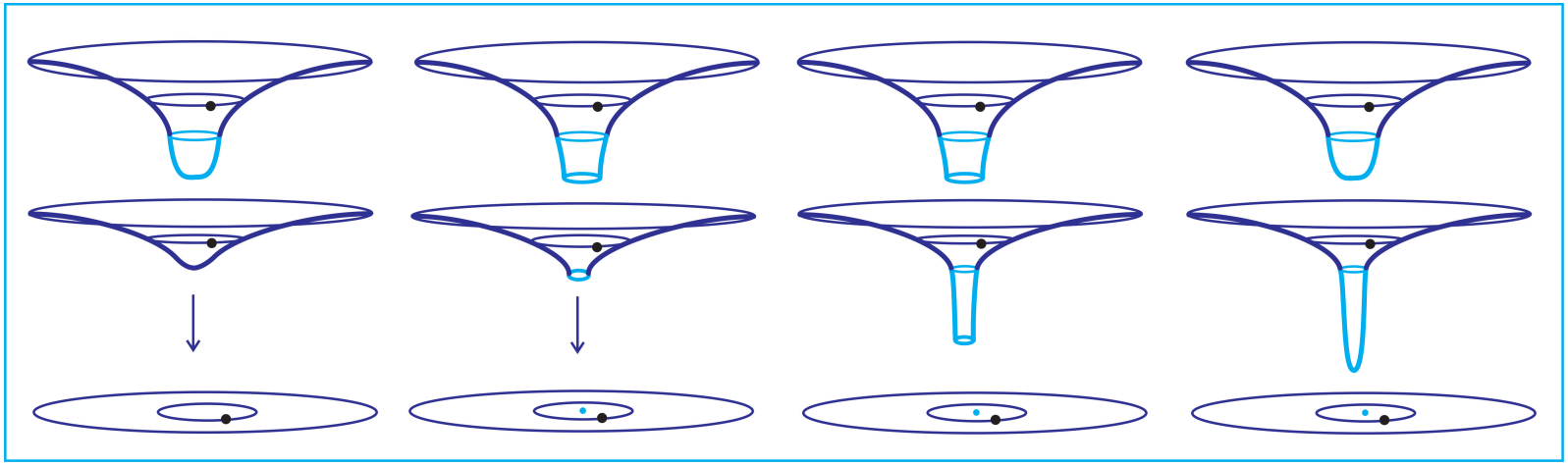

Smooth Convergence and the Positive Mass Theorem

Corvino: assuming sectional curvature bounds M_j converge smoothly to $\mathbb{E}^3$ when $m_{ADM}(M_j) \to 0$ [ProcAMS-2005].

In general no smooth convergence (last 3 columns):

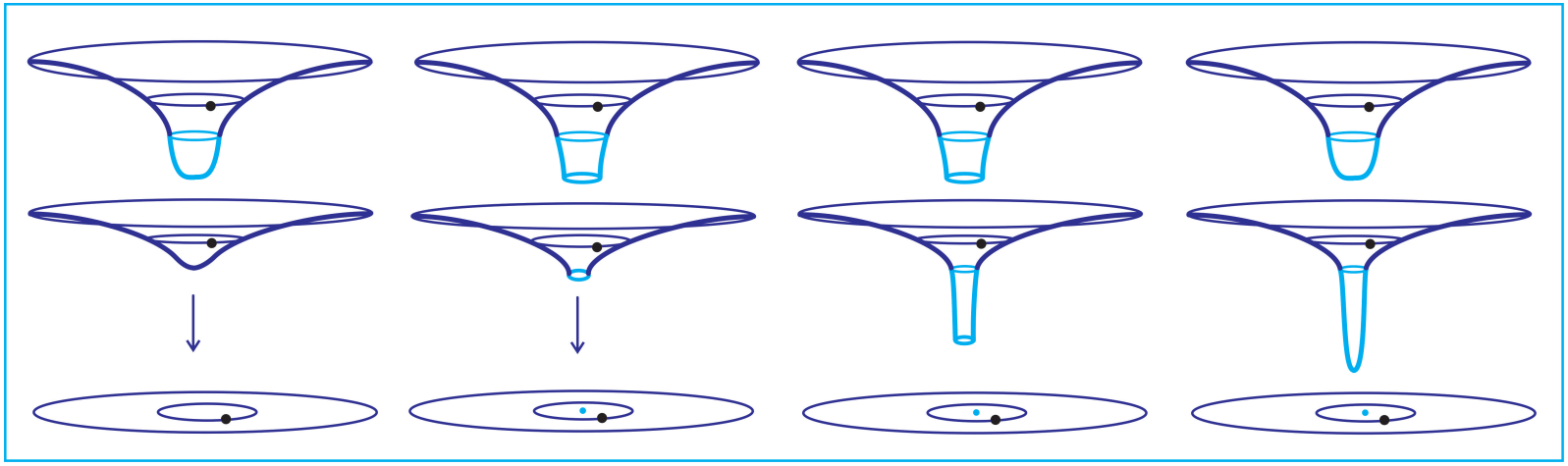

Lee has shown there is smooth convergence outside a compact set when the end is harmonically flat [Duke-2009].

Smooth Convergence and the Positive Mass Theorem

Corvino: assuming sectional curvature bounds M_j converge smoothly to $\mathbb{E}^3$ when $m_{ADM}(M_j) \to 0$ [ProcAMS-2005].

In general no smooth convergence (last 3 columns):

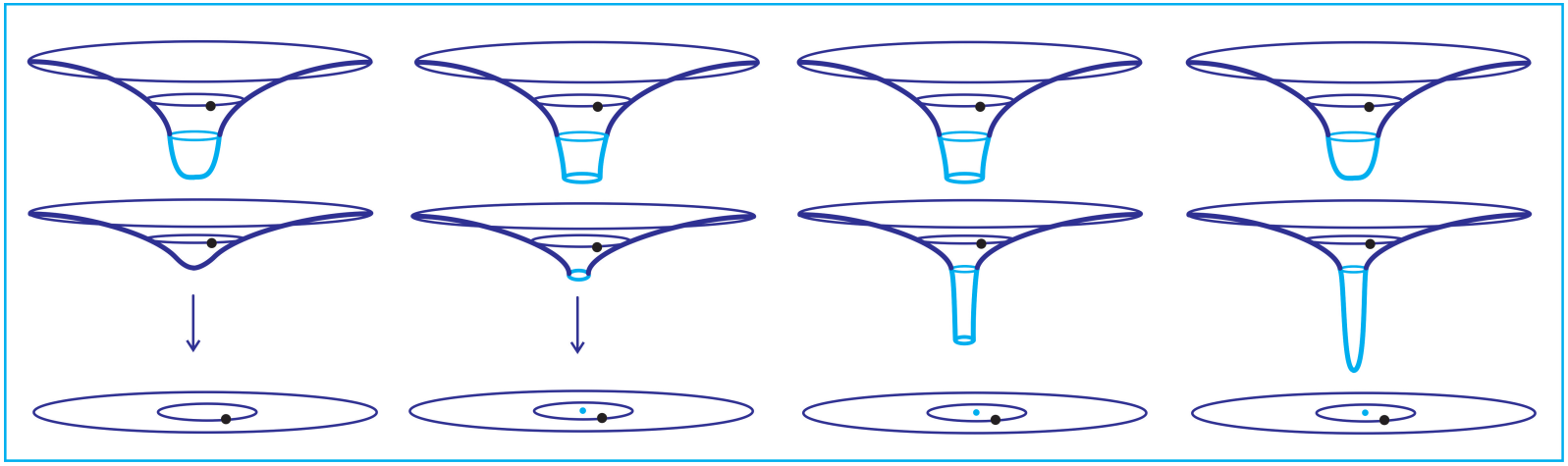

Lee has shown there is smooth convergence outside a compact set when the end is harmonically flat [Duke-2009].

There is no smooth convergence outside in general:

One can add wells and horizons arbitrarily far out and arbitrarily densely as discussed before [Lee-S— ArXiV-2011].

Smooth Convergence and the Positive Mass Theorem

Corvino: assuming sectional curvature bounds M_j converge smoothly to $\mathbb{E}^3$ when $m_{ADM}(M_j) \to 0$ [ProcAMS-2005].

In general no smooth convergence (last 3 columns):

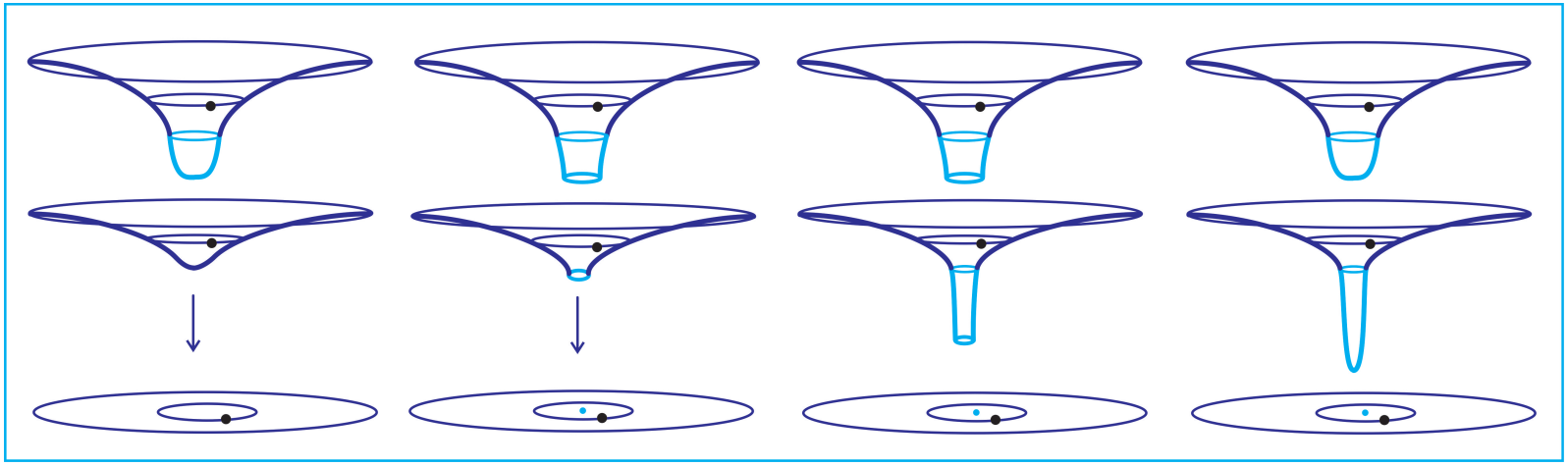

Lee has shown there is smooth convergence outside a compact set when the end is harmonically flat [Duke-2009].

There is no smooth convergence outside in general:

One can add wells and horizons arbitrarily far out and arbitrarily densely as discussed before [Lee-S— ArXiV-2011].

Bray-Finster 2002, Finster-Cath 2002, Finster 2009: There are L^2 curvature bounds for manifolds with small ADM mass.

Smooth Convergence and the Positive Mass Theorem

Corvino: assuming sectional curvature bounds M_j converge smoothly to $\mathbb{E}^3$ when $m_{ADM}(M_j) \to 0$ [ProcAMS-2005].

In general no smooth convergence (last 3 columns):

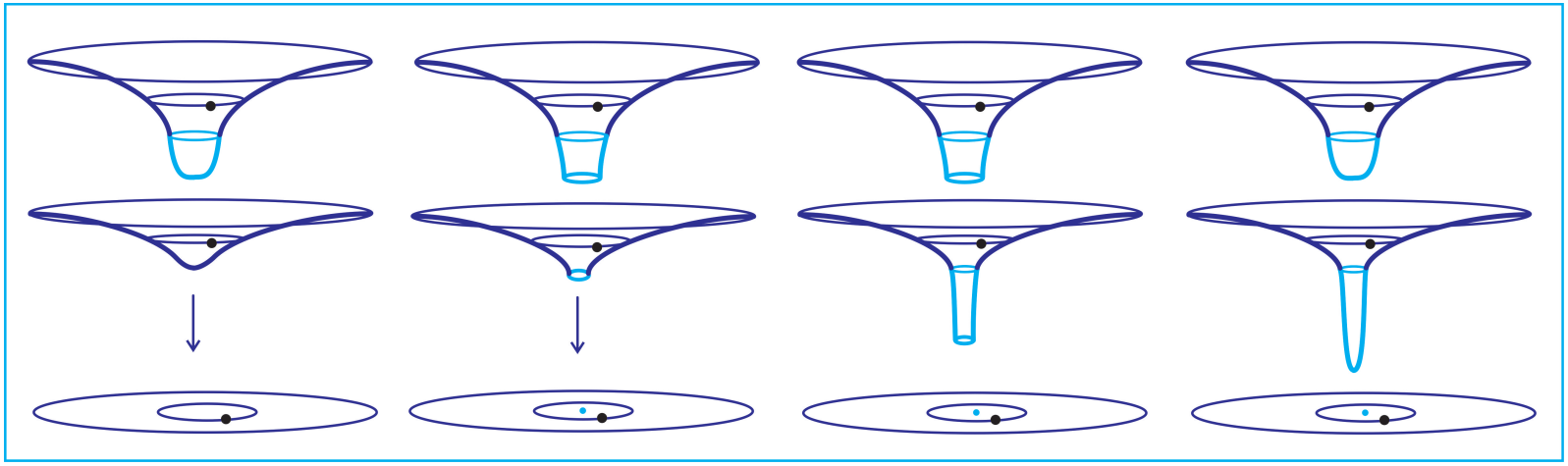

Lee has shown there is smooth convergence outside a compact set when the end is harmonically flat [Duke-2009].

There is no smooth convergence outside in general:

One can add wells and horizons arbitrarily far out and arbitrarily densely as discussed before [Lee-S— ArXiV-2011].

Bray-Finster 2002, Finster-Cath 2002, Finster 2009: There are L^2 curvature bounds for manifolds with small ADM mass.

Gromov-Hausdorff Convergence of Manifolds

Defn: The Hausdorff distance between subsets $A, B \subset Z$ is

$$d_H^Z(A,B) = \inf\{r : \ A \subset T_r(B) \text{ and } B \subset T_r(A)\}.$$

Defn: The Gromov-Hausdorff distance between metric spaces is

$$d_{GH}(X,Y) = \inf d_H^Z(\varphi(X), \psi(Y))$$

where the infimum is taken over all metric spaces Z and isometric embeddings $\varphi : X \to Z$ and $\psi : Y \to Z$.

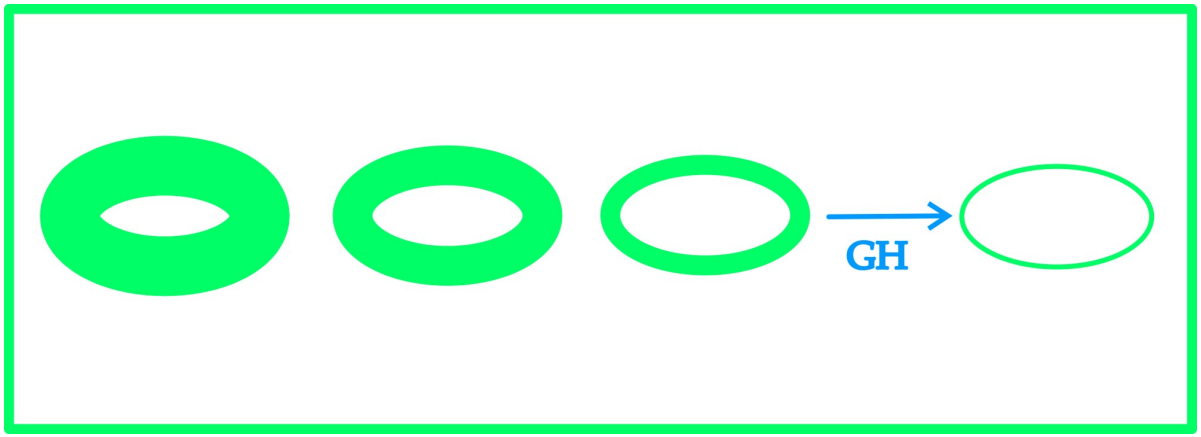

Defn: An isometric embedding is a map $\varphi : X \to Z$ such that

$$d_Z(\varphi(x_1), \varphi(x_2)) = d_X(x_1, x_2) \text{ for all } x_1, x_2 \in X \qquad (\textit{copy}).$$

Lee-S—: GH limits of the M_j in the Main Thm need not be $\mathbb{E}^3$

Gromov-Hausdorff Convergence of Manifolds

Defn: The Hausdorff distance between subsets $A, B \subset Z$ is

$$d_H^Z(A,B) = \inf\{r : \ A \subset T_r(B) \text{ and } B \subset T_r(A)\}.$$

Defn: The Gromov-Hausdorff distance between metric spaces is

$$d_{GH}(X,Y) = \inf d_H^Z(\varphi(X), \psi(Y))$$

where the infimum is taken over all metric spaces Z and isometric embeddings $\varphi : X \to Z$ and $\psi : Y \to Z$.

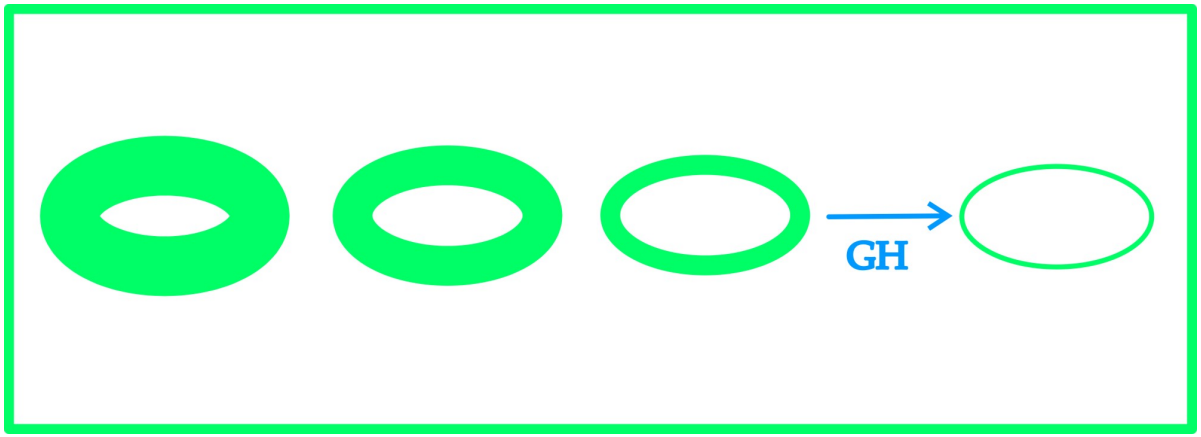

Defn: An isometric embedding is a map $\varphi : X \to Z$ such that

$$d_Z(\varphi(x_1), \varphi(x_2)) = d_X(x_1, x_2) \text{ for all } x_1, x_2 \in X \qquad (\textit{copy}).$$

Lee-S—: GH limits of the M_j in the Main Thm need not be $\mathbb{E}^3$

Difficulties with Gromov-Hausdorff Convergence

Lee-S—: GH limits of M_j in the Main Conjecture need not exist:

Difficulties with Gromov-Hausdorff Convergence

Lee-S—: GH limits of M_j in the Main Conjecture need not exist:

Gromov's Compactness Theorem: If metric spaces X_j have $\mathrm{diam}(X_j) \leq D$ and a uniform upper bound, $N(r)$, on the number of disjoint balls of radius r, then a subsequence converges: $X_{j_i} \xrightarrow{\mathrm{GH}} Y$.

The converse also holds: if Y is compact and $X_j \xrightarrow{\mathrm{GH}} Y$, then there is a uniform upper bound on diameter $\mathrm{diam}(X_j)$ and on $N(r)$.

Difficulties with Gromov-Hausdorff Convergence

Lee-S—: GH limits of M_j in the Main Conjecture need not exist:

Gromov's Compactness Theorem: If metric spaces X_j have $\mathrm{diam}(X_j) \leq D$ and a uniform upper bound, $N(r)$, on the number of disjoint balls of radius r, then a subsequence converges: $X_{j_i} \xrightarrow{\mathrm{GH}} Y$.

The converse also holds: if Y is compact and $X_j \xrightarrow{\mathrm{GH}} Y$, then there is a uniform upper bound on diameter $\mathrm{diam}(X_j)$ and on $N(r)$.

Difficulties with Gromov-Hausdorff Convergence

Lee-S—: GH limits of M_j in the Main Conjecture need not exist:

Gromov's Compactness Theorem: If metric spaces X_j have $\mathrm{diam}(X_j) \leq D$ and a uniform upper bound, $N(r)$, on the number of disjoint balls of radius r, then a subsequence converges: $X_{j_i} \xrightarrow{\mathrm{GH}} Y$.

The converse also holds: if Y is compact and $X_j \xrightarrow{\mathrm{GH}} Y$, then there is a uniform upper bound on diameter $\mathrm{diam}(X_j)$ and on $N(r)$.

Difficulties with Gromov-Hausdorff Convergence

Lee-S—: GH limits of M_j in the Main Conjecture need not exist:

Gromov's Compactness Theorem: If metric spaces X_j have $\mathrm{diam}(X_j) \leq D$ and a uniform upper bound, $N(r)$, on the number of disjoint balls of radius r, then a subsequence converges: $X_{j_i} \xrightarrow{\mathrm{GH}} Y$.

The converse also holds: if Y is compact and $X_j \xrightarrow{\mathrm{GH}} Y$, then there is a uniform upper bound on diameter $\mathrm{diam}(X_j)$ and on $N(r)$.

Ilmanen [2004]: *Notes that the following sequence of M_j^3 of positive scalar curvature has no Gromov-Hausdorff limit:*

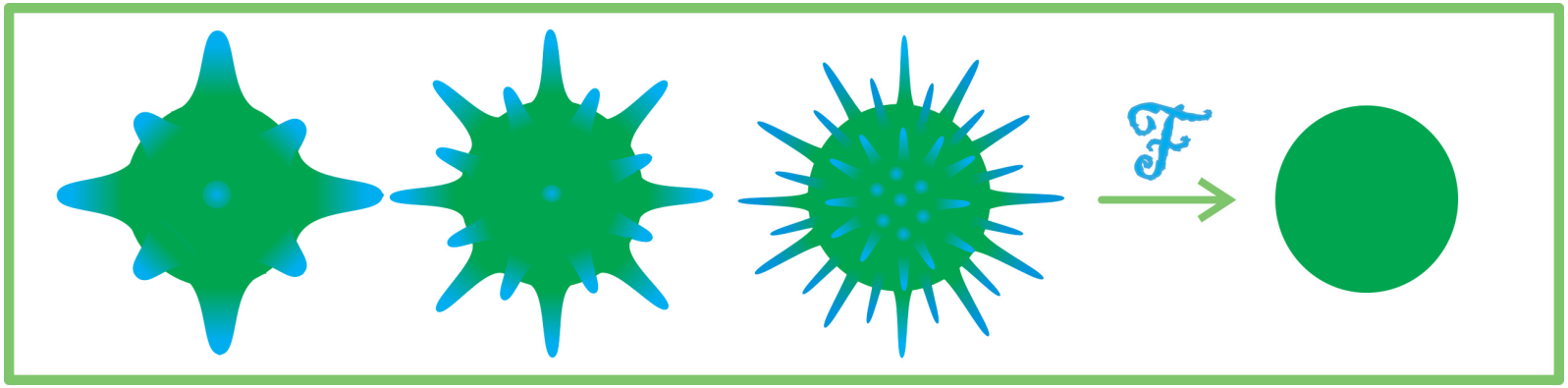

and asks: can one define a weak convergence where this sequence of M_j^3 converges to the standard S^3?

Difficulties with Gromov-Hausdorff Convergence

Lee-S—: GH limits of M_j in the Main Conjecture need not exist:

Gromov's Compactness Theorem: If metric spaces X_j have $\mathrm{diam}(X_j) \leq D$ and a uniform upper bound, $N(r)$, on the number of disjoint balls of radius r, then a subsequence converges: $X_{j_i} \xrightarrow{\mathrm{GH}} Y$.

The converse also holds: if Y is compact and $X_j \xrightarrow{\mathrm{GH}} Y$, then there is a uniform upper bound on diameter $\mathrm{diam}(X_j)$ and on $N(r)$.

Ilmanen [2004]: *Notes that the following sequence of M_j^3 of positive scalar curvature has no Gromov-Hausdorff limit:*

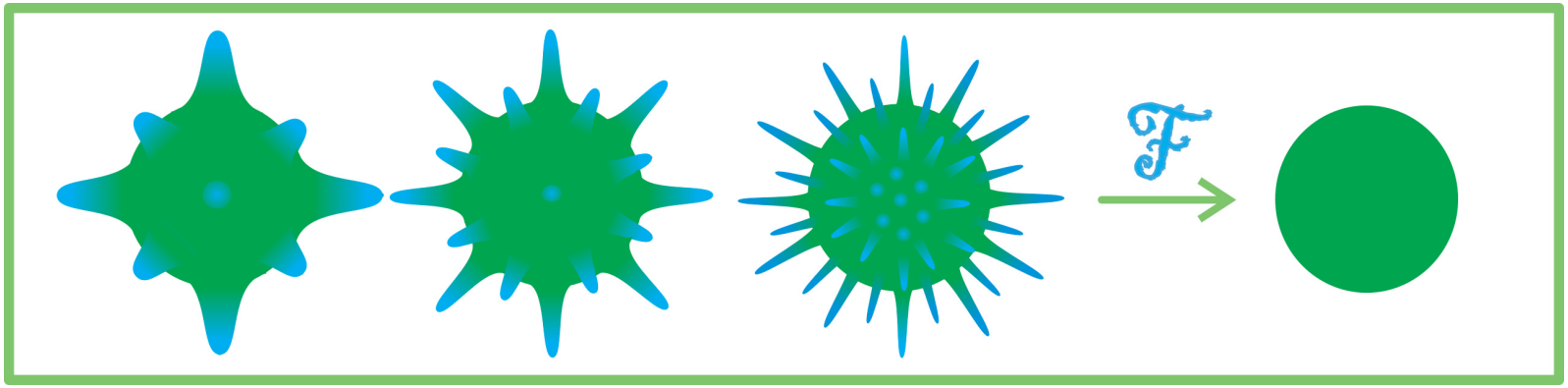

and asks: can one define a weak convergence where this sequence of M_j^3 converges to the standard S^3?

Difficulties with Gromov-Hausdorff Convergence

Lee-S—: GH limits of M_j in the Main Conjecture need not exist:

Gromov's Compactness Theorem: If metric spaces X_j have $\mathrm{diam}(X_j) \leq D$ and a uniform upper bound, $N(r)$, on the number of disjoint balls of radius r, then a subsequence converges: $X_{j_i} \xrightarrow{\mathrm{GH}} Y$.

The converse also holds: if Y is compact and $X_j \xrightarrow{\mathrm{GH}} Y$, then there is a uniform upper bound on diameter $\mathrm{diam}(X_j)$ and on $N(r)$.

Ilmanen [2004]: *Notes that the following sequence of M_j^3 of positive scalar curvature has no Gromov-Hausdorff limit:*

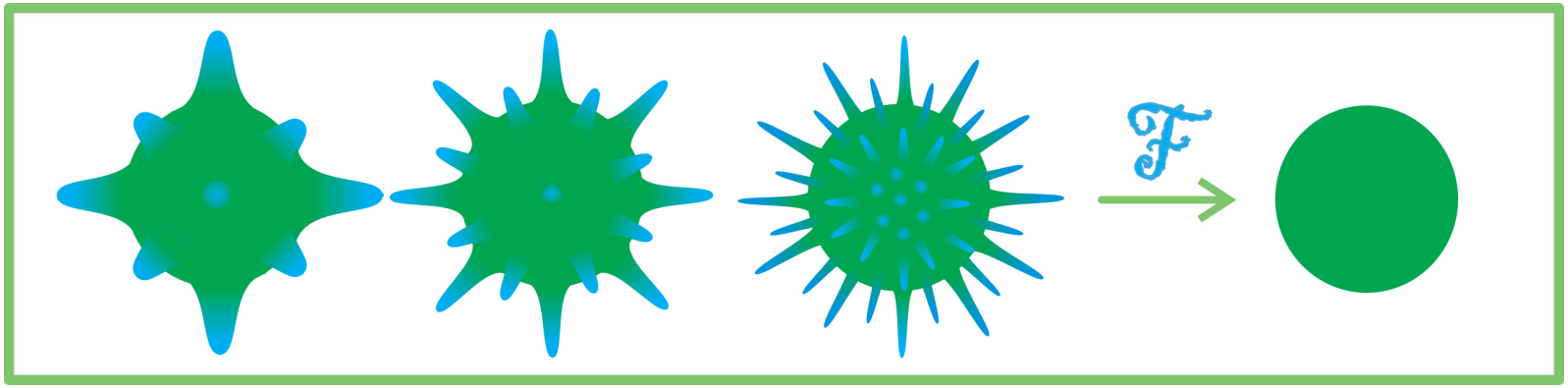

and asks: can one define a weak convergence where this sequence of M_j^3 converges to the standard S^3?

Ilmanen's question lead to the Intrinsic Flat Distance.

Difficulties with Gromov-Hausdorff Convergence

Lee-S—: GH limits of M_j in the Main Conjecture need not exist:

Gromov's Compactness Theorem: If metric spaces X_j have $\mathrm{diam}(X_j) \leq D$ and a uniform upper bound, $N(r)$, on the number of disjoint balls of radius r, then a subsequence converges: $X_{j_i} \xrightarrow{\mathrm{GH}} Y$.

The converse also holds: if Y is compact and $X_j \xrightarrow{\mathrm{GH}} Y$, then there is a uniform upper bound on diameter $\mathrm{diam}(X_j)$ and on $N(r)$.

Ilmanen [2004]: *Notes that the following sequence of M_j^3 of positive scalar curvature has no Gromov-Hausdorff limit:*

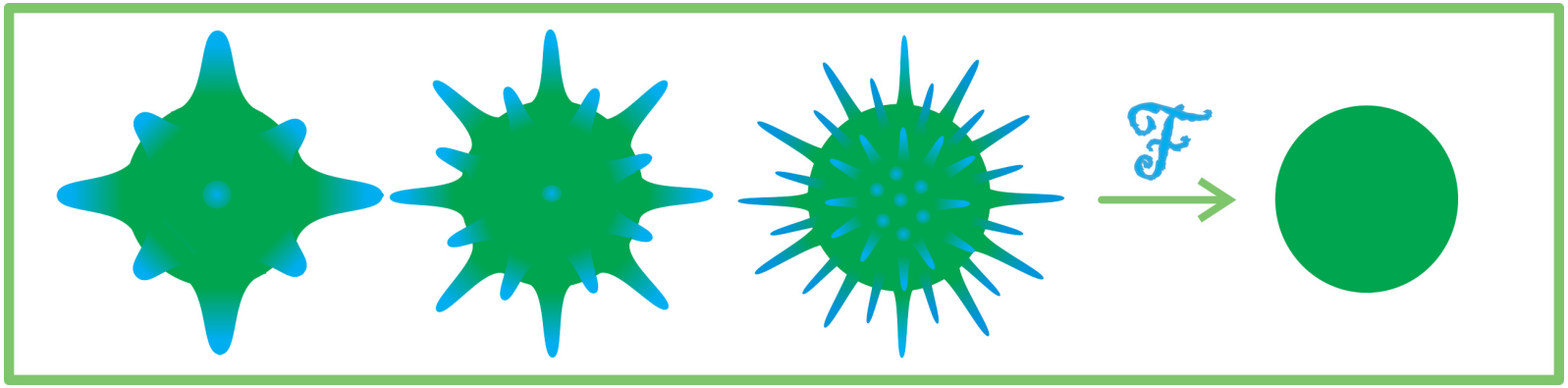

and asks: can one define a weak convergence where this sequence of M_j^3 converges to the standard S^3?

Ilmanen's question lead to the Intrinsic Flat Distance.

Towards the Intrinsic Flat Distance

Towards the Intrinsic Flat Distance

The definition extends the notion of the Flat Distance between oriented submanifolds of Euclidean space defined by **Whitney** and adapted to integral currents by **Federer-Fleming** :

$$d_F(T, S) = \inf\{\mathbf{M}(B) + \mathbf{M}(A) : A = \partial B + S - T\}$$

where the infimum is taken over all integral currents B.

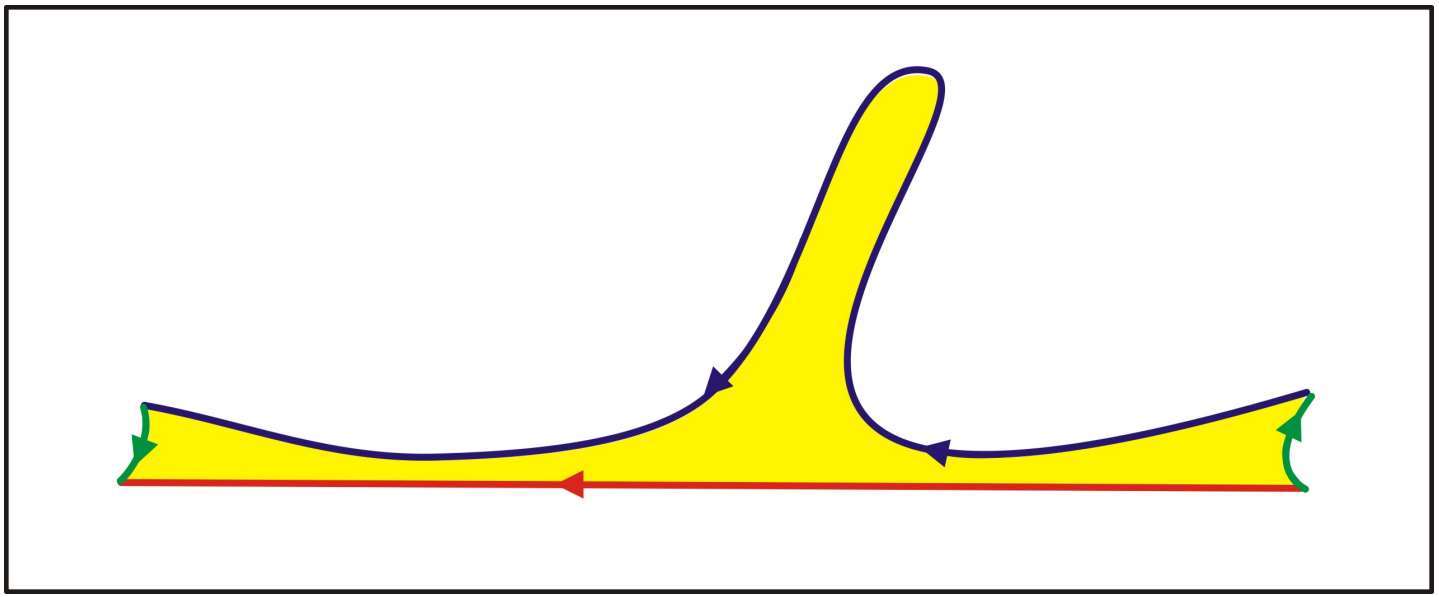

Note $d_F(T^m, S^m) \leq \mathrm{vol}(A^m) + \mathrm{vol}(B^{m+1})$ for any submanifolds

$$A^m \text{ and } B^{m+1} \text{ such that } \int_A \omega = \int_B d\omega + \int_S \omega - \int_T \omega.$$

Towards the Intrinsic Flat Distance

Ambrosio-Kirchheim [Acta-2000] extended the notion of integral currents to complete metric spaces Z using tuples of Lipschitz functions in the place of differential forms so that if $\varphi : M \to Z$ is Lipschitz we have a current:

$$\varphi_*[M](f, \pi_1, ...\pi_m) = \int_M f \circ \varphi \, d(\pi_1 \circ \varphi) \wedge \cdots \wedge d(\pi_m \circ \varphi). \quad (4)$$

In general integral currents, B, are built from rectifiable sets with Borel weights such that $\partial B(f, \pi_1, ...\pi_m) := B(1, f, \pi_1, ...\pi_m)$ is also rectifiable.

Wenger [CalcVarPDE-2007] extended the notion of flat distance exactly as before:

$$d_F^Z(T, S) = \inf \{\mathbf{M}(B) + \mathbf{M}(A) \, : \, A = \partial B + S - T\}$$

where the infimum is taken over all integral currents B. He proved the distance is attained by a pair of integral currents.

Intrinsic Flat Distance [S—Wenger JDG-2011]

Defn: a m dimensional integral current space $M = (X, d, T)$ is a countably $\mathcal{H}^m$ rectifiable metric spaces (X, d) with a current structure, $T \in \mathbf{I}_k(\bar{X})$, such that $set(T) = X$. M may be $(0, 0, 0)$.

Defn: The intrinsic flat distance between integral current spaces $M_1 = (X_1, d_1, T_1)$ and $M_2 = (X_2, d_2, T_2)$ is defined by taking the infimum of the flat distance

$$d_{\mathcal{F}}(M_1, M_2) := \inf d_F^Z(\varphi_{1\#} T_1, \varphi_{2\#} T_2).$$

over all isometric embeddings $\varphi_1 : X_1 \to Z$ and $\varphi_2 : X_2 \to Z$.

Theorem [S-W]: If M_i are precompact then $d_{\mathcal{F}}(M_1, M_2) = 0$ iff there is an isometry $f : X_1 \to X_2$ such that $f_\# T_1 = T_2$. So when M_1 and M_2 are oriented Riemannian manifolds with boundary, they have an orientation preserving isometry between them.

Thm [S-W]: For M_i precompact, there exists a precompact $k+1$ dim integral current space, (Z, d, S), with

$$d_{\mathcal{F}}(M_1, M_2) = \mathbf{M}(S) + \mathbf{M}(\partial S + \varphi_{1\#} T_1 - \varphi_{2\#} T_2).$$

Estimating the Intrinsic Flat Distance:

To estimate the intrinsic flat distance between two oriented Riemannian manifolds, M_1^m, M_2^m, we need only find isometric embeddings $\varphi_i : M_i \to Z$ to a common complete metric space Z and two submanifolds B^{m+1}, A^m within Z such that

$$\int_{\varphi_1(M_1)} \omega - \int_{\varphi_2(M_2)} \omega = \int_B d\omega + \int_A \omega. \tag{5}$$

We call B^{m+1} the filling manifold and A^m the excess boundary. Then

$$d_{\mathcal{F}}(M_1, M_2) \leq \mathrm{vol}_{m+1}(B) + \mathrm{vol}_m(A). \tag{6}$$

The filling manifold is often a manifold with corners, and the excess boundary can be made of many pieces, some could be regions in M_1 and M_2. (draw)

Estimating the Intrinsic Flat Distance:

To estimate the intrinsic flat distance between two oriented Riemannian manifolds, M_1^m, M_2^m, we need only find isometric embeddings $\varphi_i : M_i \to Z$ to a common complete metric space Z and two submanifolds B^{m+1}, A^m within Z such that

$$\int_{\varphi_1(M_1)} \omega - \int_{\varphi_2(M_2)} \omega = \int_B d\omega + \int_A \omega. \tag{5}$$

We call B^{m+1} the filling manifold and A^m the excess boundary. Then

$$d_{\mathcal{F}}(M_1, M_2) \leq \mathrm{vol}_{m+1}(B) + \mathrm{vol}_m(A). \tag{6}$$

The filling manifold is often a manifold with corners, and the excess boundary can be made of many pieces, some could be regions in M_1 and M_2. (draw)
More generally A and B are integral current spaces: oriented countably $\mathcal{H}^m$ rectifiable spaces with Borel integer valued weights whose boundaries are also integral current spaces.

Estimating the Intrinsic Flat Distance:

To estimate the intrinsic flat distance between two oriented Riemannian manifolds, M_1^m, M_2^m, we need only find isometric embeddings $\varphi_i : M_i \to Z$ to a common complete metric space Z and two submanifolds B^{m+1}, A^m within Z such that

$$\int_{\varphi_1(M_1)} \omega - \int_{\varphi_2(M_2)} \omega = \int_B d\omega + \int_A \omega. \tag{5}$$

We call B^{m+1} the filling manifold and A^m the excess boundary. Then

$$d_{\mathcal{F}}(M_1, M_2) \leq \mathrm{vol}_{m+1}(B) + \mathrm{vol}_m(A). \tag{6}$$

The filling manifold is often a manifold with corners, and the excess boundary can be made of many pieces, some could be regions in M_1 and M_2. (draw)
More generally A and B are integral current spaces: oriented countably $\mathcal{H}^m$ rectifiable spaces with Borel integer valued weights whose boundaries are also integral current spaces.

Estimating the Intrinsic Flat Distance:

To estimate the intrinsic flat distance between two oriented Riemannian manifolds, M_1^m, M_2^m, we need only find isometric embeddings $\varphi_i : M_i \to Z$ to a common complete metric space Z and two submanifolds B^{m+1}, A^m within Z such that

$$\int_{\varphi_1(M_1)} \omega - \int_{\varphi_2(M_2)} \omega = \int_B d\omega + \int_A \omega. \tag{5}$$

We call B^{m+1} the filling manifold and A^m the excess boundary. Then

$$d_{\mathcal{F}}(M_1, M_2) \leq \mathrm{vol}_{m+1}(B) + \mathrm{vol}_m(A). \tag{6}$$

The filling manifold is often a manifold with corners, and the excess boundary can be made of many pieces, some could be regions in M_1 and M_2. (draw)
More generally A and B are integral current spaces: oriented countably $\mathcal{H}^m$ rectifiable spaces with Borel integer valued weights whose boundaries are also integral current spaces.

Proving the Main Theorem

Lee-S—: Suppose M_j^3 is a rotationally symmetric manifold with no interior minimal surfaces, nonnegative scalar curvature and either $\partial M = \emptyset$ or ∂M is a minimal surface.
Fixing an $\alpha_0 > 0$ and $D > 0$, if $m_{ADM}(M^3) \to 0$ then

$$d_{\mathcal{F}}(T_D(\Sigma_{\alpha_0}) \subset M_j^3, T_D(\Sigma_{\alpha_0}) \subset \mathbb{E}^3) \to 0.$$

Proof: We construct an explicit filling manifold...

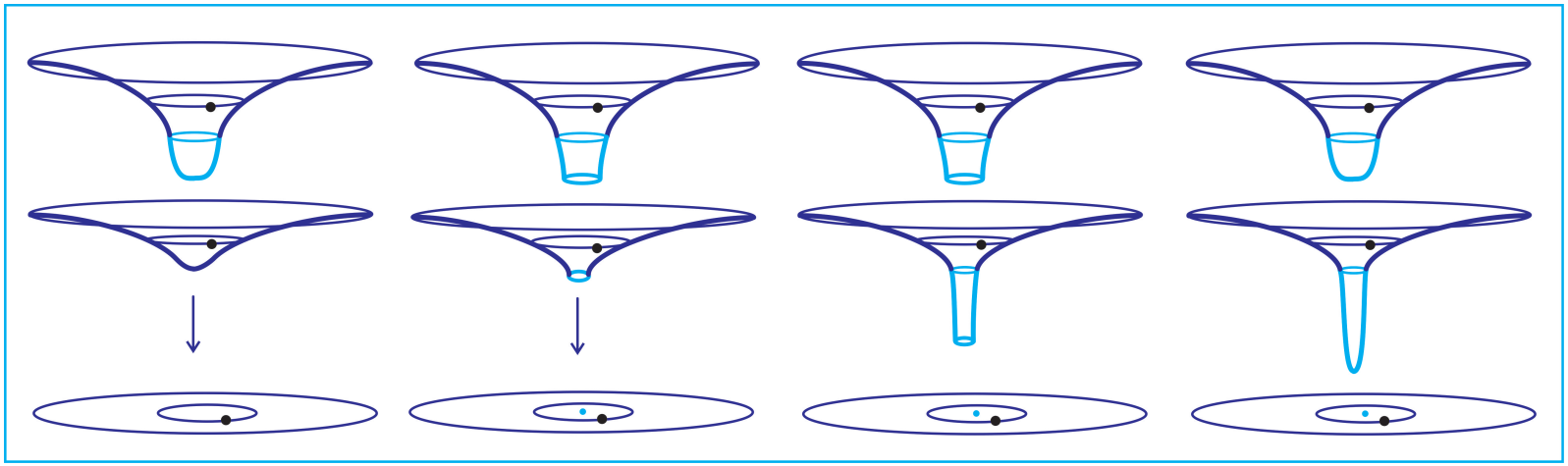

Proving the Main Theorem

Lee-S—: Suppose M_j^3 is a rotationally symmetric manifold with no interior minimal surfaces, nonnegative scalar curvature and either $\partial M = \emptyset$ or ∂M is a minimal surface.
Fixing an $\alpha_0 > 0$ and $D > 0$, if $m_{ADM}(M^3) \to 0$ then

$$d_{\mathcal{F}}(T_D(\Sigma_{\alpha_0}) \subset M_j^3, T_D(\Sigma_{\alpha_0}) \subset \mathbb{E}^3) \to 0.$$

Proof: We construct an explicit filling manifold...

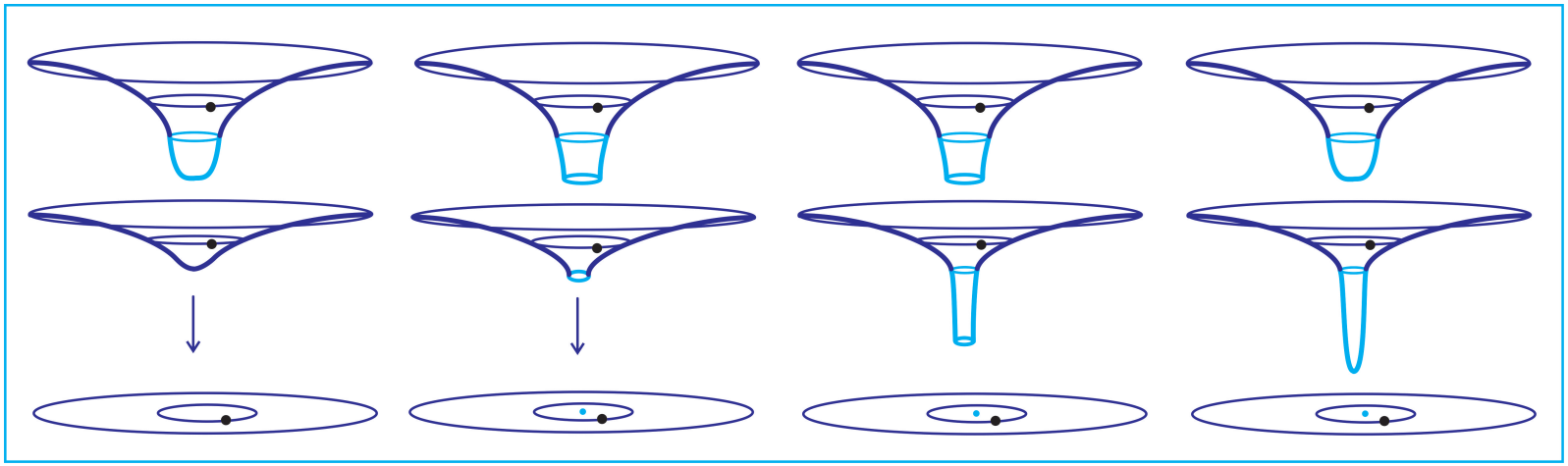

These manifolds are all submanifolds of Euclidean space but they are not isometrically embedded because an isometric embedding, $\varphi : M \to Z$, has $d_Z(\varphi(x_1), \varphi(x_2)) = d_M(x_1, x_2) \qquad \forall x_1, x_2 \in X$.

Proving the Main Theorem

Lee-S—: Suppose M_j^3 is a rotationally symmetric manifold with no interior minimal surfaces, nonnegative scalar curvature and either $\partial M = \emptyset$ or ∂M is a minimal surface.
Fixing an $\alpha_0 > 0$ and $D > 0$, if $m_{ADM}(M^3) \to 0$ then

$$d_{\mathcal{F}}(T_D(\Sigma_{\alpha_0}) \subset M_j^3, T_D(\Sigma_{\alpha_0}) \subset \mathbb{E}^3) \to 0.$$

Proof: We construct an explicit filling manifold...

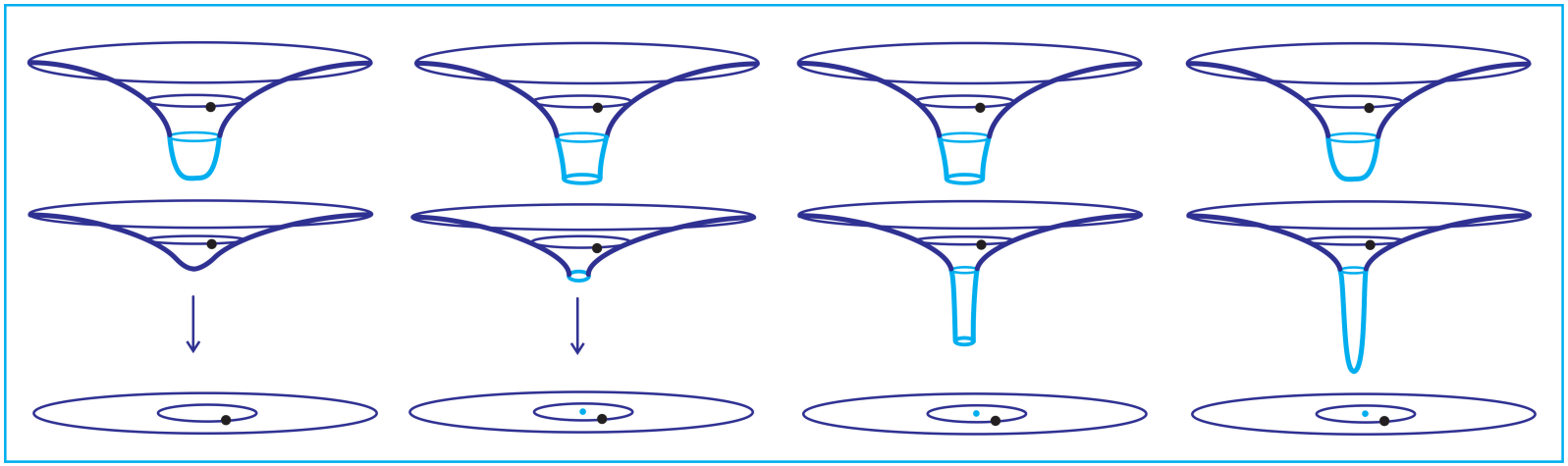

These manifolds are all submanifolds of Euclidean space but they are not isometrically embedded because an isometric embedding, $\varphi : M \to Z$, has $d_Z(\varphi(x_1), \varphi(x_2)) = d_M(x_1, x_2) \qquad \forall x_1, x_2 \in X$.

Adding a Strip

A key ingredient of the proof of the Main Theorem which can also be applied by those trying to prove the Main Conjecture:

Thm [S—Lee]: Given a submanifold $\varphi : M \to N$ with an embedding constant

$$C_M := \sup_{p,q \in M} \left(d_M(p,q) - d_N(\varphi(p), \varphi(q)) \right).$$

Setting $S_M = \sqrt{C_M(diam(M) + C_M)}$ and defining

$Z = \{(x,0) : x \in N\} \cup \{(x,s) : x \in \varphi(M), s \in [0, S_M]\} \subset N \times [0, S_M]$

then $\psi : M \to Z$ defined $\psi(x) = (\varphi(x), S_M)$ is an isometric embedding into Z.

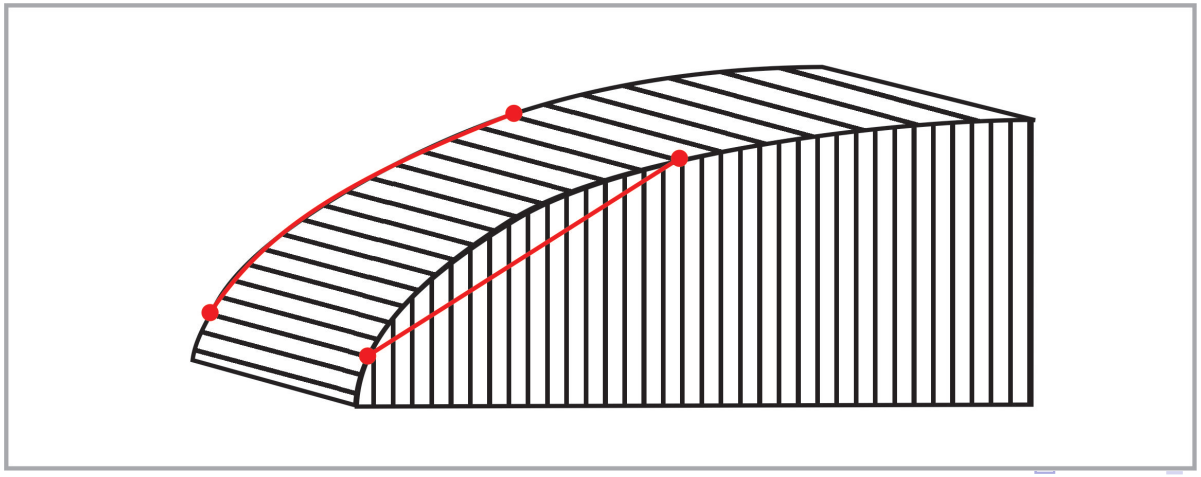

To complete the proof of the Main Theorem:

To complete the proof of the Main Theorem:

1) Chop off a well at a radius r_ϵ of small volume.

To complete the proof of the Main Theorem:

1) Chop off a well at a radius r_ϵ of small volume.
2) Embed $T_D(\Sigma_{\alpha_0}) \subset M_j$ as a submanifold of Euclidean space,

To complete the proof of the Main Theorem:

1) Chop off a well at a radius r_ϵ of small volume.
2) Embed $T_D(\Sigma_{\alpha_0}) \subset M_j$ as a submanifold of Euclidean space,
3) Show the embedding constant is small using the small ADM mass, and add a strip, B_2, as follows:

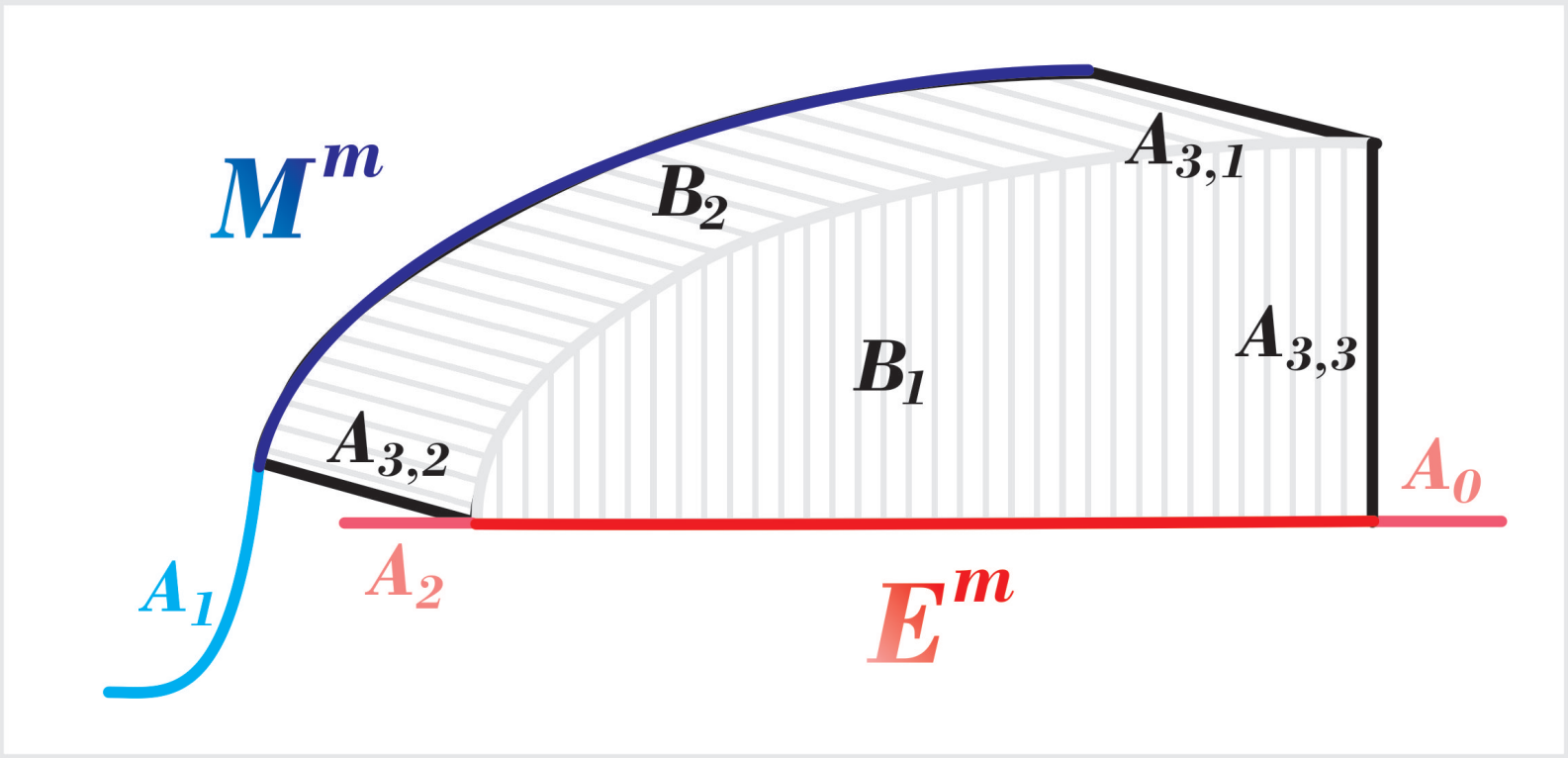

To complete the proof of the Main Theorem:

1) Chop off a well at a radius r_ϵ of small volume.
2) Embed $T_D(\Sigma_{\alpha_0}) \subset M_j$ as a submanifold of Euclidean space,
3) Show the embedding constant is small using the small ADM mass, and add a strip, B_2, as follows:

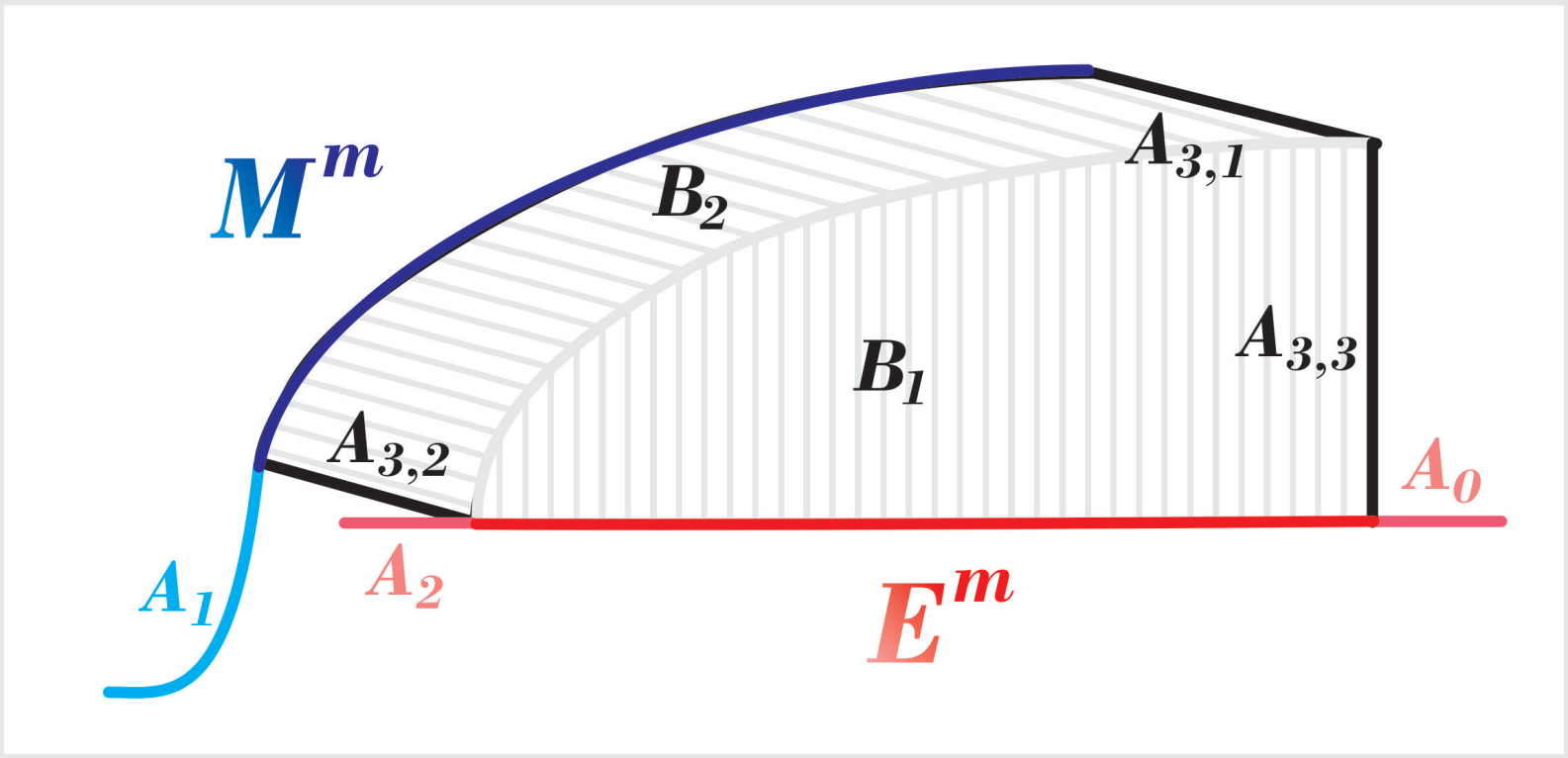

4) $d_{\mathcal{F}}(T_D(\Sigma_0), T_D(\Sigma_0)) \leq vol(B) + vol(A)$ where $B = B_1 \cup B_2$ and $A = A_0 \cup A_1 \cup A_2 \cup A_{3,1} \cup A_{3,2} \cup A_{3,3}$.

To complete the proof of the Main Theorem:

1) Chop off a well at a radius r_ϵ of small volume.
2) Embed $T_D(\Sigma_{\alpha_0}) \subset M_j$ as a submanifold of Euclidean space,
3) Show the embedding constant is small using the small ADM mass, and add a strip, B_2, as follows:

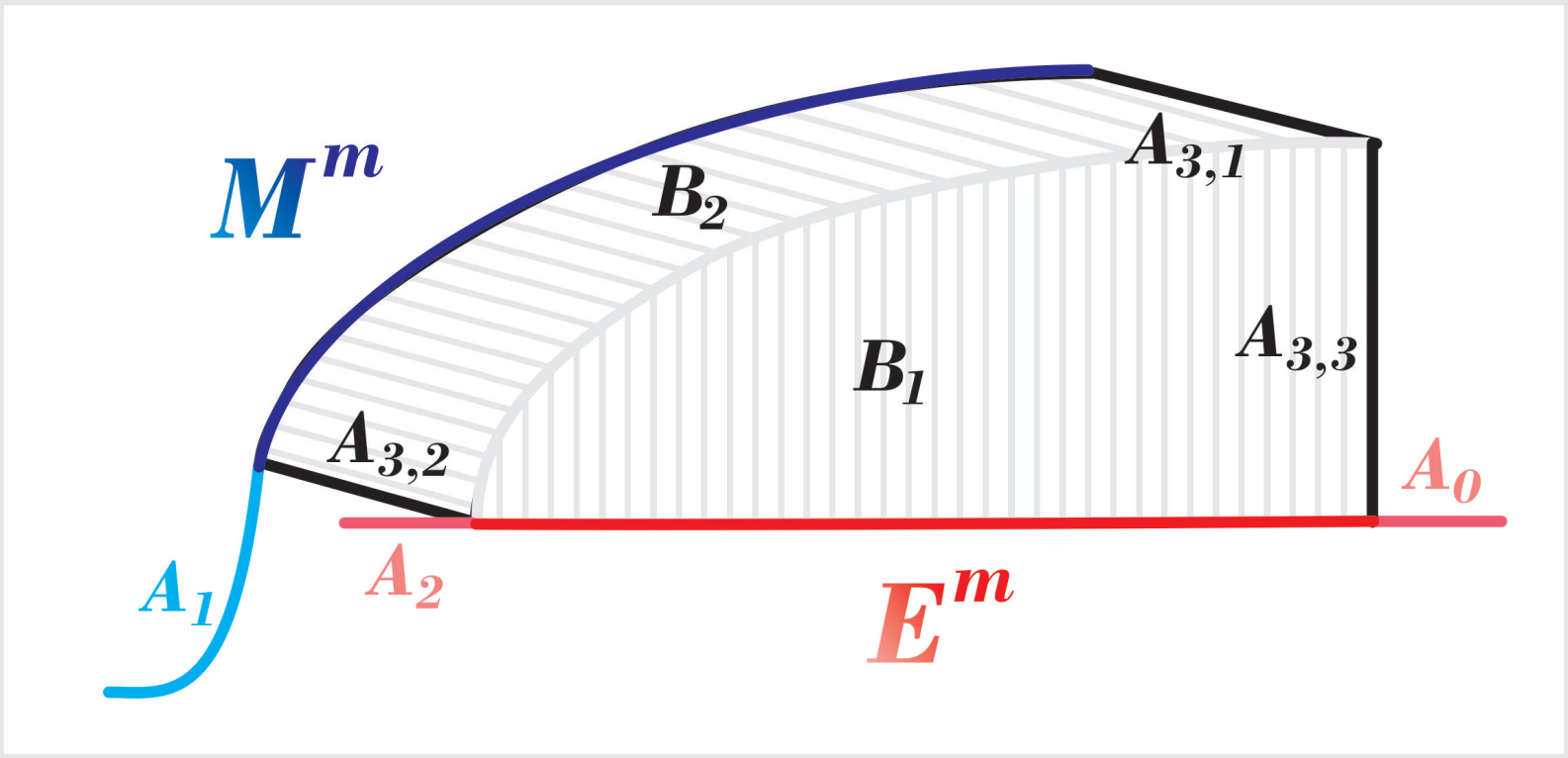

4) $d_{\mathcal{F}}(T_D(\Sigma_0), T_D(\Sigma_0)) \leq vol(B) + vol(A)$ where $B = B_1 \cup B_2$ and $A = A_0 \cup A_1 \cup A_2 \cup A_{3,1} \cup A_{3,2} \cup A_{3,3}$.
5) Show the volumes of each of these regions is small.

To complete the proof of the Main Theorem:

1) Chop off a well at a radius r_ϵ of small volume.
2) Embed $T_D(\Sigma_{\alpha_0}) \subset M_j$ as a submanifold of Euclidean space,
3) Show the embedding constant is small using the small ADM mass, and add a strip, B_2, as follows:

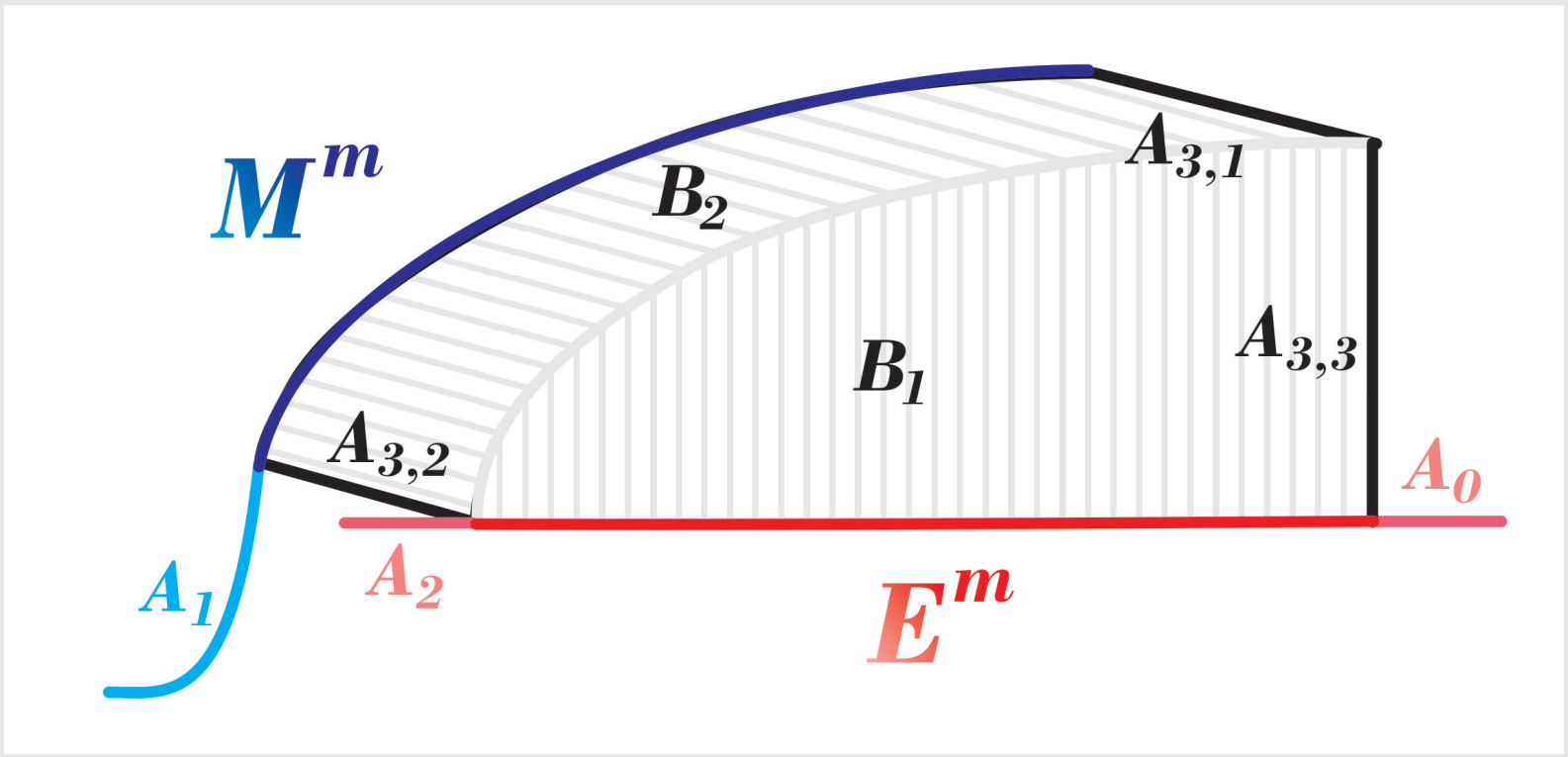

4) $d_{\mathcal{F}}(T_D(\Sigma_0), T_D(\Sigma_0)) \leq vol(B) + vol(A)$ where $B = B_1 \cup B_2$ and $A = A_0 \cup A_1 \cup A_2 \cup A_{3,1} \cup A_{3,2} \cup A_{3,3}$.
5) Show the volumes of each of these regions is small. QED

Open Problems: The Main Conjecture

Suppose M_j^3 is an asymptotically flat Riemannian manifold with no interior minimal surfaces, nonnegative scalar curvature and either $\partial M = \emptyset$ or ∂M is a minimal surface.
Fixing an $\alpha_0 > 0$ and $D > 0$, if $m_{ADM}(M^3) \to 0$ then

$$d_{\mathcal{F}}(T_D(\Sigma_{\alpha_0}) \subset M_j^3, T_D(\Sigma_{\alpha_0}) \subset \mathbb{E}^3) \to 0.$$

Open Problems: The Main Conjecture

Suppose M_j^3 is an asymptotically flat Riemannian manifold with no interior minimal surfaces, nonnegative scalar curvature and either $\partial M = \emptyset$ or ∂M is a minimal surface.
Fixing an $\alpha_0 > 0$ and $D > 0$, if $m_{ADM}(M^3) \to 0$ then

$$d_{\mathcal{F}}(T_D(\Sigma_{\alpha_0}) \subset M_j^3, T_D(\Sigma_{\alpha_0}) \subset \mathbb{E}^3) \to 0.$$

Method I: Try to prove this with explicit fillings.

Open Problems: The Main Conjecture

Suppose M_j^3 is an asymptotically flat Riemannian manifold with no interior minimal surfaces, nonnegative scalar curvature and either $\partial M = \emptyset$ or ∂M is a minimal surface.
Fixing an $\alpha_0 > 0$ and $D > 0$, if $m_{ADM}(M^3) \to 0$ then

$$d_{\mathcal{F}}(T_D(\Sigma_{\alpha_0}) \subset M_j^3, T_D(\Sigma_{\alpha_0}) \subset \mathbb{E}^3) \to 0.$$

Method I: Try to prove this with explicit fillings.

Special Cases:
1) M_j have smooth CMC foliations
and Σ_{α_0} is a leaf of area α_0
2) M_j have smooth inverse mean curvature flows
and Σ_{α_0} is a level of the flow of area α_0.

Open Problems: The Main Conjecture

Suppose M_j^3 is an asymptotically flat Riemannian manifold with no interior minimal surfaces, nonnegative scalar curvature and either $\partial M = \emptyset$ or ∂M is a minimal surface.
Fixing an $\alpha_0 > 0$ and $D > 0$, if $m_{ADM}(M^3) \to 0$ then

$$d_{\mathcal{F}}(T_D(\Sigma_{\alpha_0}) \subset M_j^3, T_D(\Sigma_{\alpha_0}) \subset \mathbb{E}^3) \to 0.$$

Method I: Try to prove this with explicit fillings.

Special Cases:
1) M_j have smooth CMC foliations
and Σ_{α_0} is a leaf of area α_0
2) M_j have smooth inverse mean curvature flows
and Σ_{α_0} is a level of the flow of area α_0.

In General: try applying Huisken-Ilmanen IMCF
and bound the volumes of the skipped regions if possible.

Open Problems: Integral Current Spaces

Method II: Try to prove the main conjecture by taking a limit then proving the positive mass theorem holds on the limit space:

Open Problems: Integral Current Spaces

Method II: Try to prove the main conjecture by taking a limit then proving the positive mass theorem holds on the limit space:

S—Wenger [JDG-2011]: M_∞ is 3 dimensional and countable $\mathcal{H}^m$ rectifiable, so it has disjoint biLipschitz charts.

Open Problems: Integral Current Spaces

Method II: Try to prove the main conjecture by taking a limit then proving the positive mass theorem holds on the limit space:

S—Wenger [JDG-2011]: M_∞ is 3 dimensional and countable $\mathcal{H}^m$ rectifiable, so it has disjoint biLipschitz charts.

Open: Define nonnegative scalar curvature and positive mass on integral current spaces [in progress]

Open Problems: Integral Current Spaces

Method II: Try to prove the main conjecture by taking a limit then proving the positive mass theorem holds on the limit space:

S—Wenger [JDG-2011]: M_∞ is 3 dimensional and countable $\mathcal{H}^m$ rectifiable, so it has disjoint biLipschitz charts.

Open: Define nonnegative scalar curvature and positive mass on integral current spaces [in progress]

Open: Define ingredients needed to imitate one of the proofs of the Positive Mass Theorem:

Schoen-Yau proof needs minimal surfaces.
Witten proof needs spinors.
Huisken-Ilmanen proof needs inverse mean curvature flow.
Huisken has recent ideas involving isoperimetric domains.

Warning: Integral Current Spaces can be Disconnected:

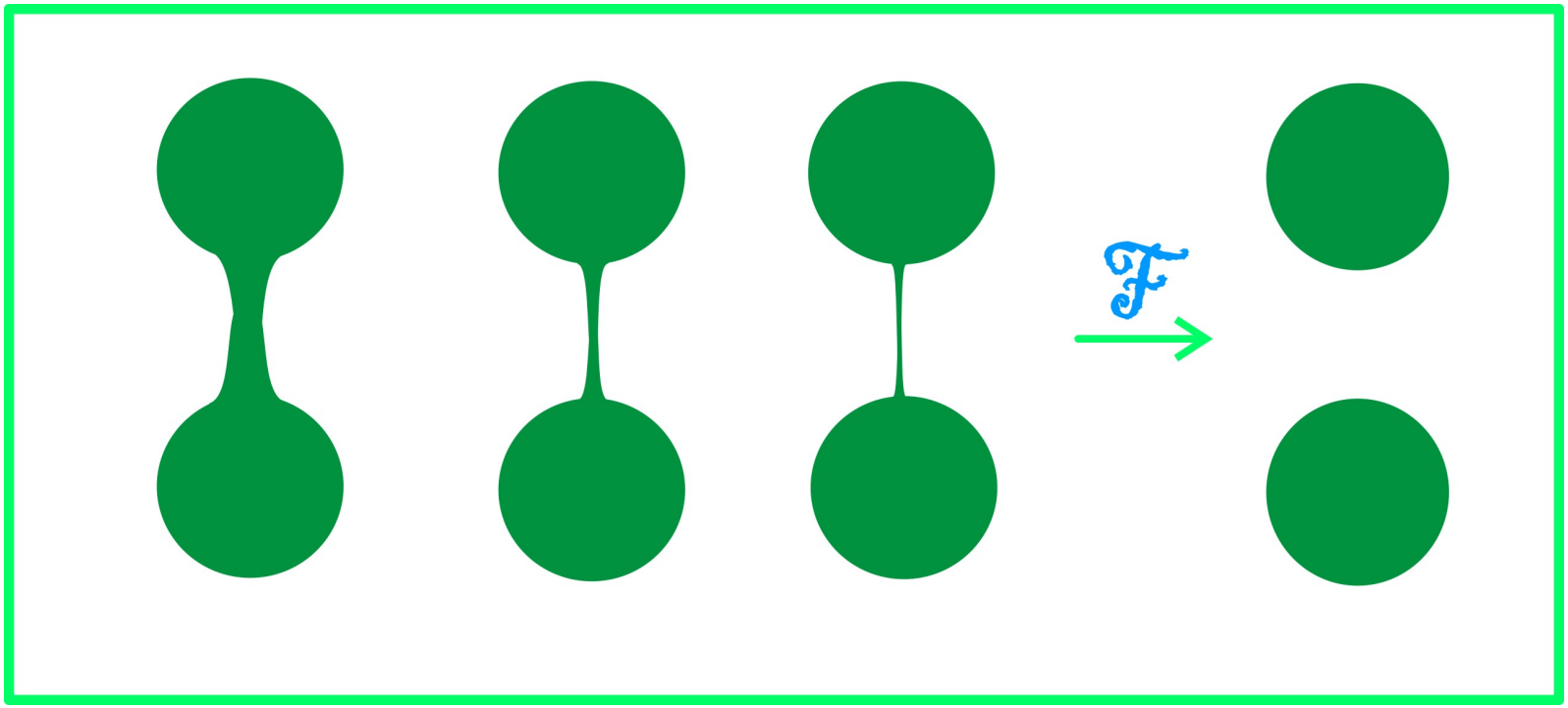

This example can be constructed in 3 dimensions with positive scalar curvature [S—Wenger JDG 2011 Appendix]

They may even have countably many components:

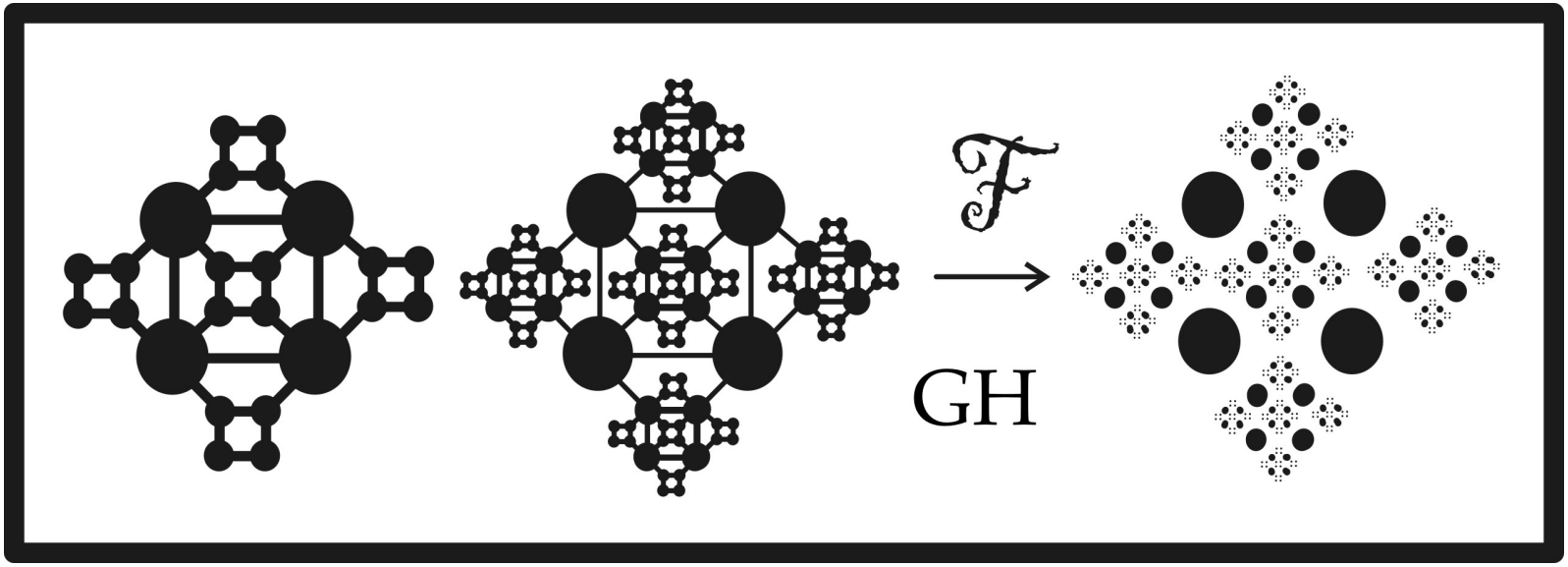

They may even have countably many components:

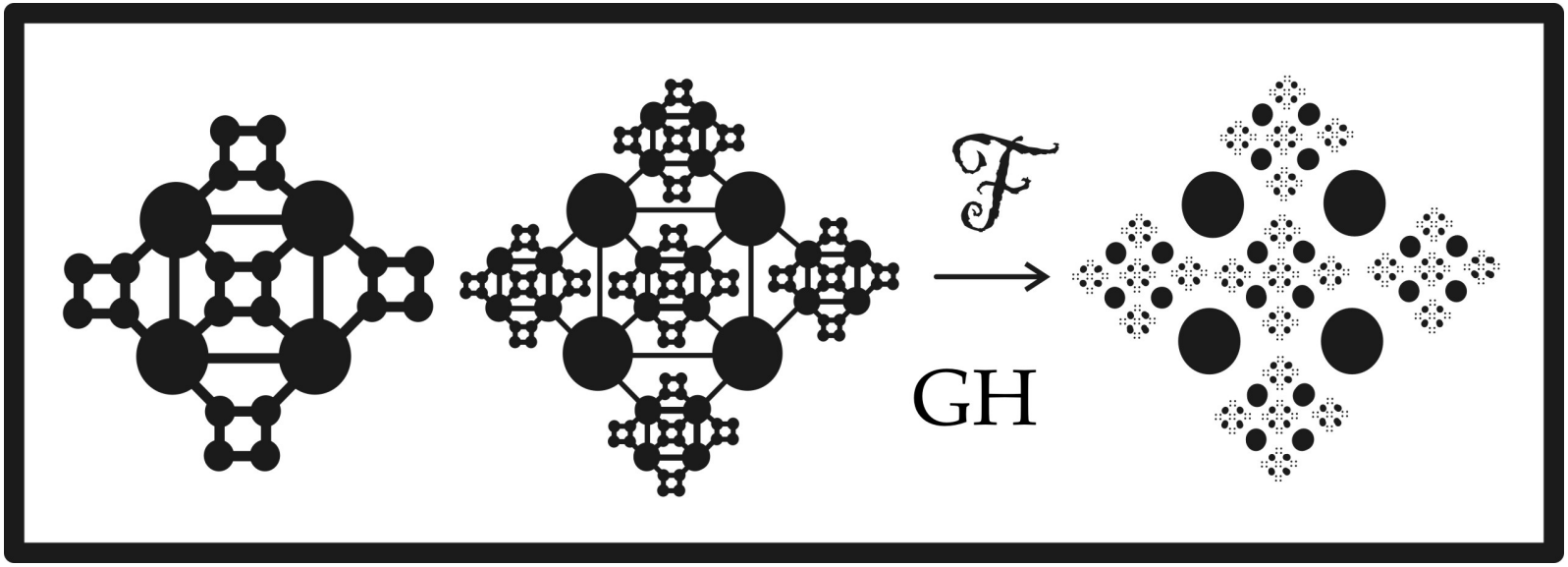

They may even have countably many components:

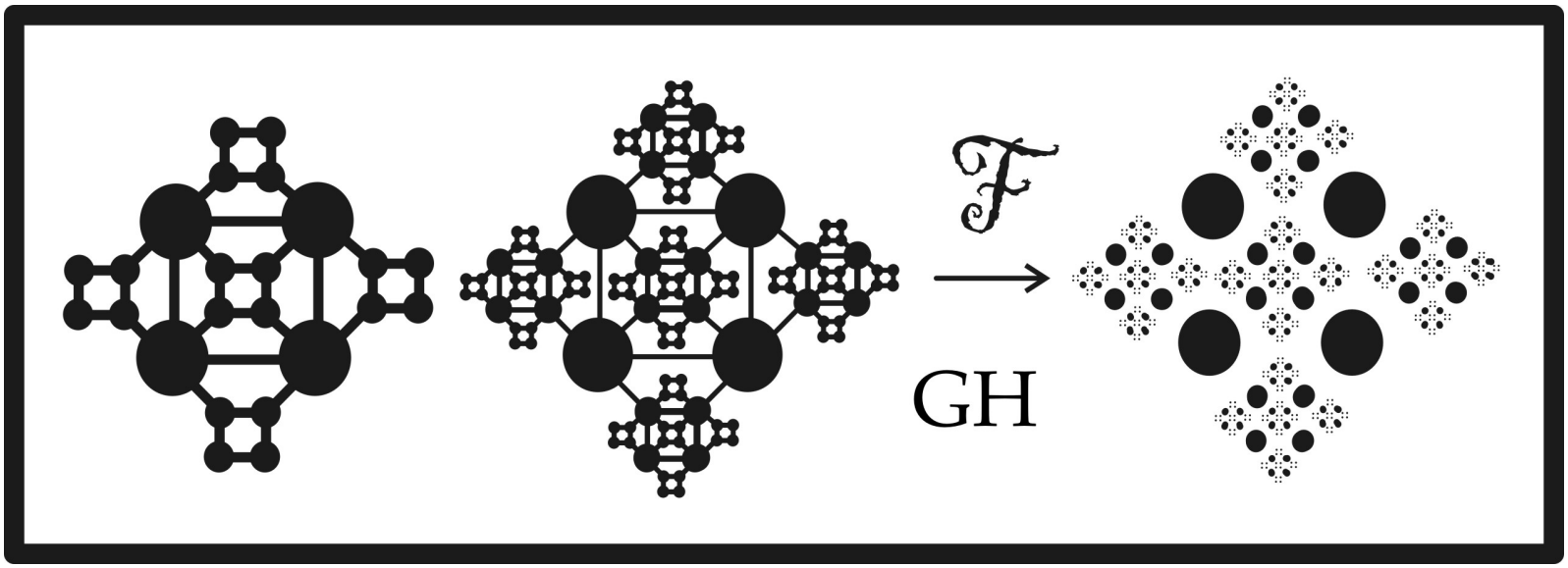

Conjecture: Intrinsic flat limits of manifolds with nonnegative scalar curvature and no interior minimal surfaces are connected.

Warning: Intrinsic Flat Limits may be the 0 space

if one of the following occurs:

(1) $vol(M_j) \to 0$.

(2) $dim_H(Y) = 0$ where $d_{GH}(M_j, Y) \to 0$.

(3) there is cancellation as two sheets come together with opposite orientations:

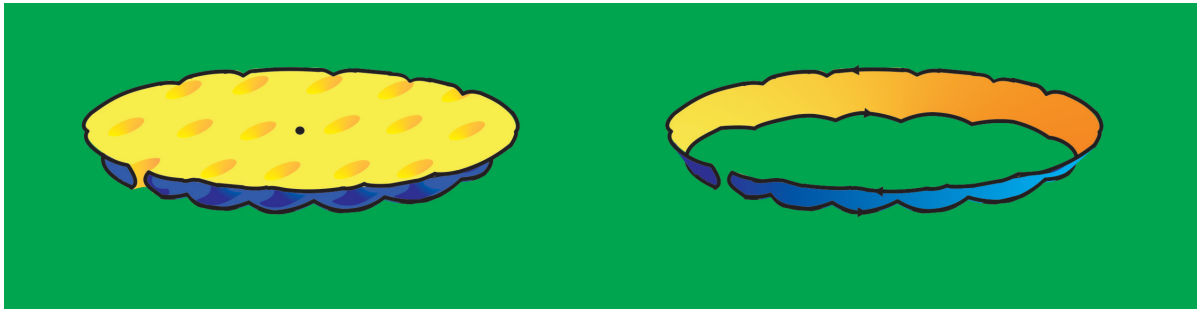

Cancellation may occur for M_j^3 with positive scalar curvature and interior minimal surfaces [S—Wenger JDG2011].

S—Wenger [CalcVarPDE2010]: Cancellation does not occur in situations where filling volumes of spheres are well controlled.

Conjecture: If M_j^3 have nonnegative scalar curvature and no interior minimal surfaces, then there is no cancellation in the limit.

Almost Equality in the Penrose Inequality

If $m_H(\partial M_j) = m_{fix} > 0$ and $m_{ADM}(M_j) \to m_{fix}$, does M_j converge in some sense to Schwarzschild space? NO!

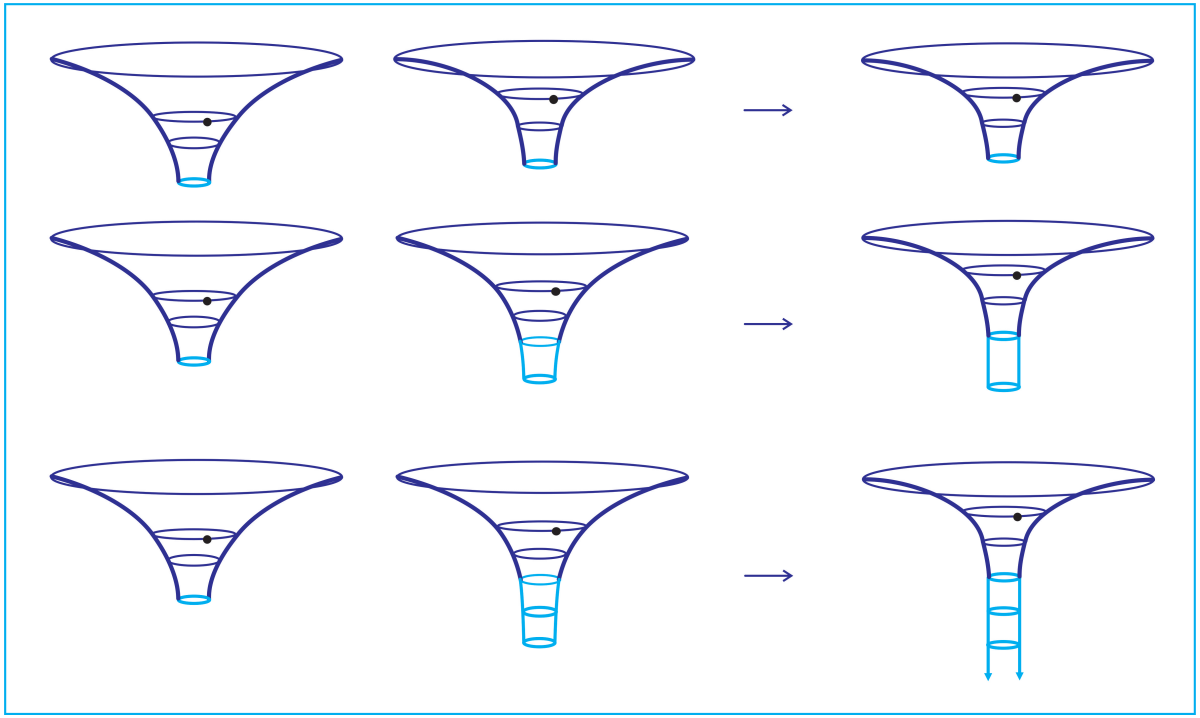

Here we see sequences of manifolds converging smoothly to Schwarzschild space with a well of arbitrary depth attached.

Lee-S—(to appear): In the rotationally symmetric case, these are the only possible intrinsic flat limit spaces [Lee-S—2].

We conjecture this is true in general.

Thank You for the Opportunity to Speak

Links to articles about the Intrinsic Flat Distance are at

http://comet.lehman.cuny.edu/sormani/intrinsicflat.html

Let me know if you would like to work on a related project.

sormanic at member.ams.org

Thank You for the Opportunity to Speak

Links to articles about the Intrinsic Flat Distance are at

http://comet.lehman.cuny.edu/sormani/intrinsicflat.html

Let me know if you would like to work on a related project.

sormanic at member.ams.org

Thank You for the Opportunity to Speak

Links to articles about the Intrinsic Flat Distance are at

http://comet.lehman.cuny.edu/sormani/intrinsicflat.html

Let me know if you would like to work on a related project.

sormanic at member.ams.org

Thank You for the Opportunity to Speak

Links to articles about the Intrinsic Flat Distance are at

http://comet.lehman.cuny.edu/sormani/intrinsicflat.html

Let me know if you would like to work on a related project.

sormanic at member.ams.org

Ilmanen's Example

The sequence recommended by Ilmanen converges in the Intrinsic Flat Sense as long as the volumes and diameters of the sequence of spheres is uniformly bounded above:

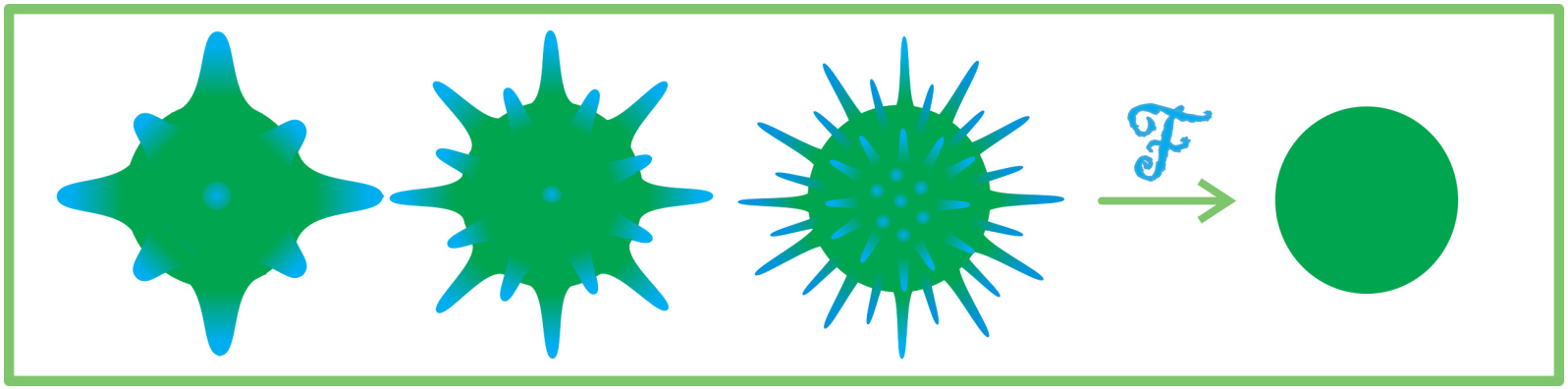

If the total volume of the bumps converges to 0 then the sequence converges to the sphere.
In fact, only the filling of the bumps needs to converge to zero...

Dimension of the Limit:

Here we see the intrinsic flat limit is a countably $\mathcal{H}^2$ rectifiable space without boundary, while the Gromov-Hausdorff limit has lower dimensional line segments joining the spheres:

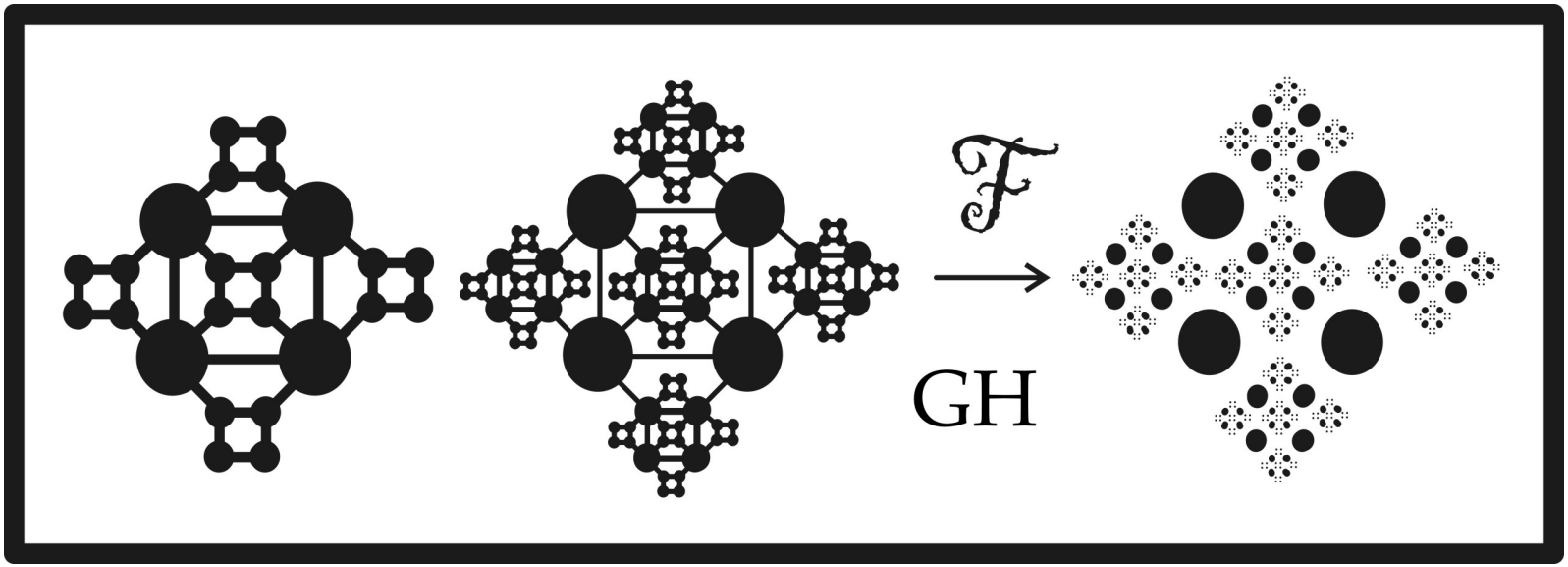

It is possible to construct sequences of Riemannian manifolds with a uniform upper bound on volume which converge to an integral current space whose completion has higher dimension.

By requiring $X = set(T)$, the set of positive lower density, we are guaranteed that X is countably $\mathcal{H}^k$ rectifiable whenever T is a k dim integral current by Ambrosio-Kircheim. We do not take the closure which could be a set of higher dimension.

Disconnected Limits: The Pipe Filling Method

Our pinched sphere M_j is embedded into the xyz plane here and the limit space (X, d_X, T) is embedded in a parallel plane:

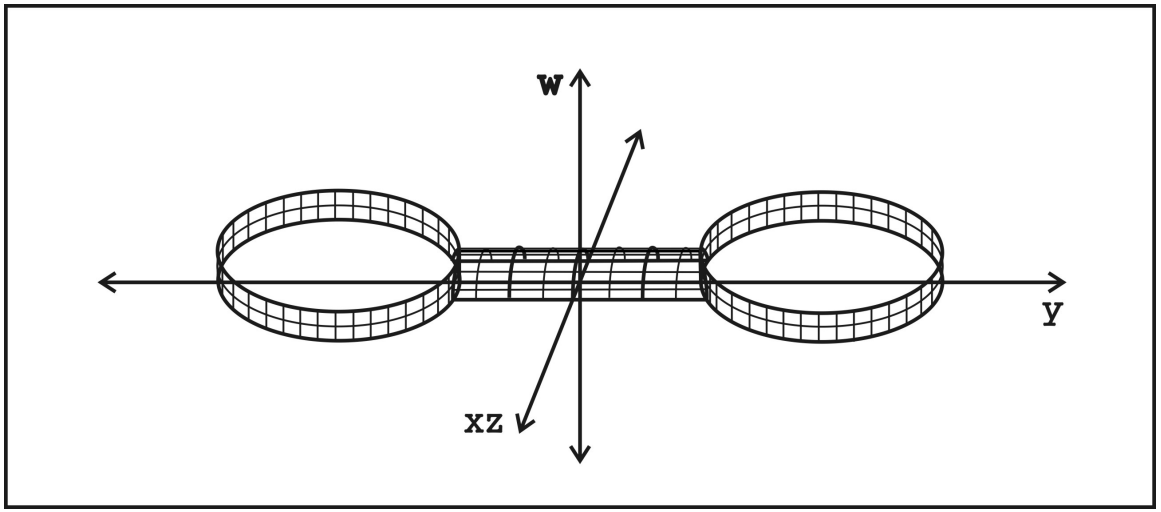

Note they do not isometrically embed in $\mathbb{R}^4$!

Now we give an explicit integral current space, (Z_j, d_j, S_j), which consists of two cylinders, $X \times [0, \epsilon_j]$, and a half cylinder of radius ϵ_j, viewed as a Lipschitz manifold with the intrinsic metric.

M_j and X do isometrically embed into Z_j. Thus:

$$d_{\mathcal{F}}(M_j, (X, d, T)) \leq \mathbf{M}(\, S_j \,) \; + \; \mathbf{M}(\, \partial S_j \; + \; \varphi_{j\#}[[M_j]] \; - \; \psi_{j\#} T_j \,)$$

$$= \; \mathbf{M}(\, S_j \,) \; + \; \mathbf{0} \; \leq \; 2\omega_2' \epsilon_j + L\epsilon_j^2 \omega_2'/2 \; \rightarrow \; 0$$

where $\omega_2' = Area(\mathbb{S}^2)$ and L is the length of the pipe.

Towards the Intrinsic Flat Distance

Ambrosio-Kirchheim [Acta-2000] extended the notion of integral currents to complete metric spaces Z using tuples of Lipschitz functions in the place of differential forms so that if $\varphi : M \to Z$ is Lipschitz we have a current:

$$\varphi_*[M](f, \pi_1, ...\pi_m) = \int_M f \circ \varphi \, d(\pi_1 \circ \varphi) \wedge \cdots \wedge d(\pi_m \circ \varphi). \quad (7)$$

In general integral currents, B, are built from rectifiable sets with Borel weights such that $\partial B(f, \pi_1, ...\pi_m) := B(1, f, \pi_1, ...\pi_m)$ is also rectifiable.

Wenger [CalcVarPDE-2007] extended the notion of flat distance exactly as before:

$$d_F^Z(T, S) = \inf \{\mathbf{M}(B) + \mathbf{M}(A) \, : \, A = \partial B + S - T\}$$

where the infimum is taken over all integral currents B. He proved the distance is attained by a pair of integral currents.

Integral Current Spaces [S—Wenger JDG-2011] (if time)

To define the intrinsic flat distance, we first defined:

Defn: An m dimensional integral current space, (X, d, T), is a countably $\mathcal{H}^m$ rectifiable metric space (X, d) with a current structure, $T \in \mathbf{I}_m(\bar{X})$, such that $\mathrm{set}(T) = X$ where $\bar{X}$ is the metric completion of X and $\mathrm{set}(T)$ is the set of positive density of T.

Example: An oriented compact Riemannian manifold with boundary is an integral current space, (M^m, d, T), where

$$T(f, \pi_1, ...\pi_m) = \int_M f \, d\pi_1 \wedge \cdots \wedge d\pi_m.$$

Defn: We define $\mathbf{M}(M) := \mathbf{M}(T)$. In the example it is the volume, $\mathbf{M}(M) = \mathrm{vol}(M)$.

Defn: The boundary of an integral current space, $M = (X, d, T)$, is $\partial M := (\mathrm{set}(\partial T), d, \partial T)$. In the example ∂M is the boundary of the Riemannian manifold with the restricted metric from M.

Intrinsic Flat Distance [S—Wenger JDG-2011]

Defn: a m dimensional integral current space $M = (X, d, T)$ is a countably $\mathcal{H}^m$ rectifiable metric spaces (X, d) with a current structure, $T \in \mathbf{I}_k(\bar{X})$, such that $set(T) = X$. M may be $(0, 0, 0)$.

Defn: The intrinsic flat distance between integral current spaces $M_1 = (X_1, d_1, T_1)$ and $M_2 = (X_2, d_2, T_2)$ is defined by taking the infimum of the flat distance

$$d_{\mathcal{F}}(M_1, M_2) := \inf d_F^Z(\varphi_{1\#} T_1, \varphi_{2\#} T_2).$$

over all isometric embeddings $\varphi_1 : X_1 \to Z$ and $\varphi_2 : X_2 \to Z$.

Theorem [S-W]: If M_i are precompact then $d_{\mathcal{F}}(M_1, M_2) = 0$ iff there is an isometry $f : X_1 \to X_2$ such that $f_\# T_1 = T_2$. So when M_1 and M_2 are oriented Riemannian manifolds with boundary, they have an orientation preserving isometry between them.

Thm [S-W]: For M_i precompact, there exists a precompact $k+1$ dim integral current space, (Z, d, S), with

$$d_{\mathcal{F}}(M_1, M_2) = \mathbf{M}(S) + \mathbf{M}(\partial S + \varphi_{1\#} T_1 - \varphi_{2\#} T_2).$$

Estimating the Intrinsic Flat Distance:

To estimate the intrinsic flat distance between two oriented Riemannian manifolds, M_1^m, M_2^m, we need only find isometric embeddings $\varphi_i : M_i \to Z$ to a common complete metric space Z and two submanifolds B^{m+1}, A^m within Z such that

$$\int_{\varphi_1(M_1)} \omega - \int_{\varphi_2(M_2)} \omega = \int_B d\omega + \int_A \omega. \tag{8}$$

We call B^{m+1} the filling manifold and A^m the excess boundary. Then

$$d_{\mathcal{F}}(M_1, M_2) \leq \mathrm{vol}_{m+1}(B) + \mathrm{vol}_m(A). \tag{9}$$

The filling manifold is often a manifold with corners, and the excess boundary can be made of many pieces, some could be regions in M_1 and M_2.

Estimating the Intrinsic Flat Distance:

To estimate the intrinsic flat distance between two oriented Riemannian manifolds, M_1^m, M_2^m, we need only find isometric embeddings $\varphi_i : M_i \to Z$ to a common complete metric space Z and two submanifolds B^{m+1}, A^m within Z such that

$$\int_{\varphi_1(M_1)} \omega - \int_{\varphi_2(M_2)} \omega = \int_B d\omega + \int_A \omega. \tag{8}$$

We call B^{m+1} the filling manifold and A^m the excess boundary. Then

$$d_{\mathcal{F}}(M_1, M_2) \leq \mathrm{vol}_{m+1}(B) + \mathrm{vol}_m(A). \tag{9}$$

The filling manifold is often a manifold with corners, and the excess boundary can be made of many pieces, some could be regions in M_1 and M_2.
More generally A and B are integral current spaces: oriented countably $\mathcal{H}^m$ rectifiable spaces with Borel integer valued weights whose boundaries are also integral current spaces.

Estimating the Intrinsic Flat Distance:

To estimate the intrinsic flat distance between two oriented Riemannian manifolds, M_1^m, M_2^m, we need only find isometric embeddings $\varphi_i : M_i \to Z$ to a common complete metric space Z and two submanifolds B^{m+1}, A^m within Z such that

$$\int_{\varphi_1(M_1)} \omega - \int_{\varphi_2(M_2)} \omega = \int_B d\omega + \int_A \omega. \tag{8}$$

We call B^{m+1} the filling manifold and A^m the excess boundary. Then

$$d_{\mathcal{F}}(M_1, M_2) \leq \mathrm{vol}_{m+1}(B) + \mathrm{vol}_m(A). \tag{9}$$

The filling manifold is often a manifold with corners, and the excess boundary can be made of many pieces, some could be regions in M_1 and M_2.
More generally A and B are integral current spaces: oriented countably $\mathcal{H}^m$ rectifiable spaces with Borel integer valued weights whose boundaries are also integral current spaces.

Estimating the Intrinsic Flat Distance:

To estimate the intrinsic flat distance between two oriented Riemannian manifolds, M_1^m, M_2^m, we need only find isometric embeddings $\varphi_i : M_i \to Z$ to a common complete metric space Z and two submanifolds B^{m+1}, A^m within Z such that

$$\int_{\varphi_1(M_1)} \omega - \int_{\varphi_2(M_2)} \omega = \int_B d\omega + \int_A \omega. \tag{8}$$

We call B^{m+1} the filling manifold and A^m the excess boundary. Then

$$d_{\mathcal{F}}(M_1, M_2) \leq \mathrm{vol}_{m+1}(B) + \mathrm{vol}_m(A). \tag{9}$$

The filling manifold is often a manifold with corners, and the excess boundary can be made of many pieces, some could be regions in M_1 and M_2.
More generally A and B are integral current spaces: oriented countably $\mathcal{H}^m$ rectifiable spaces with Borel integer valued weights whose boundaries are also integral current spaces.

Contrasting with Gromov's Square Convergence:

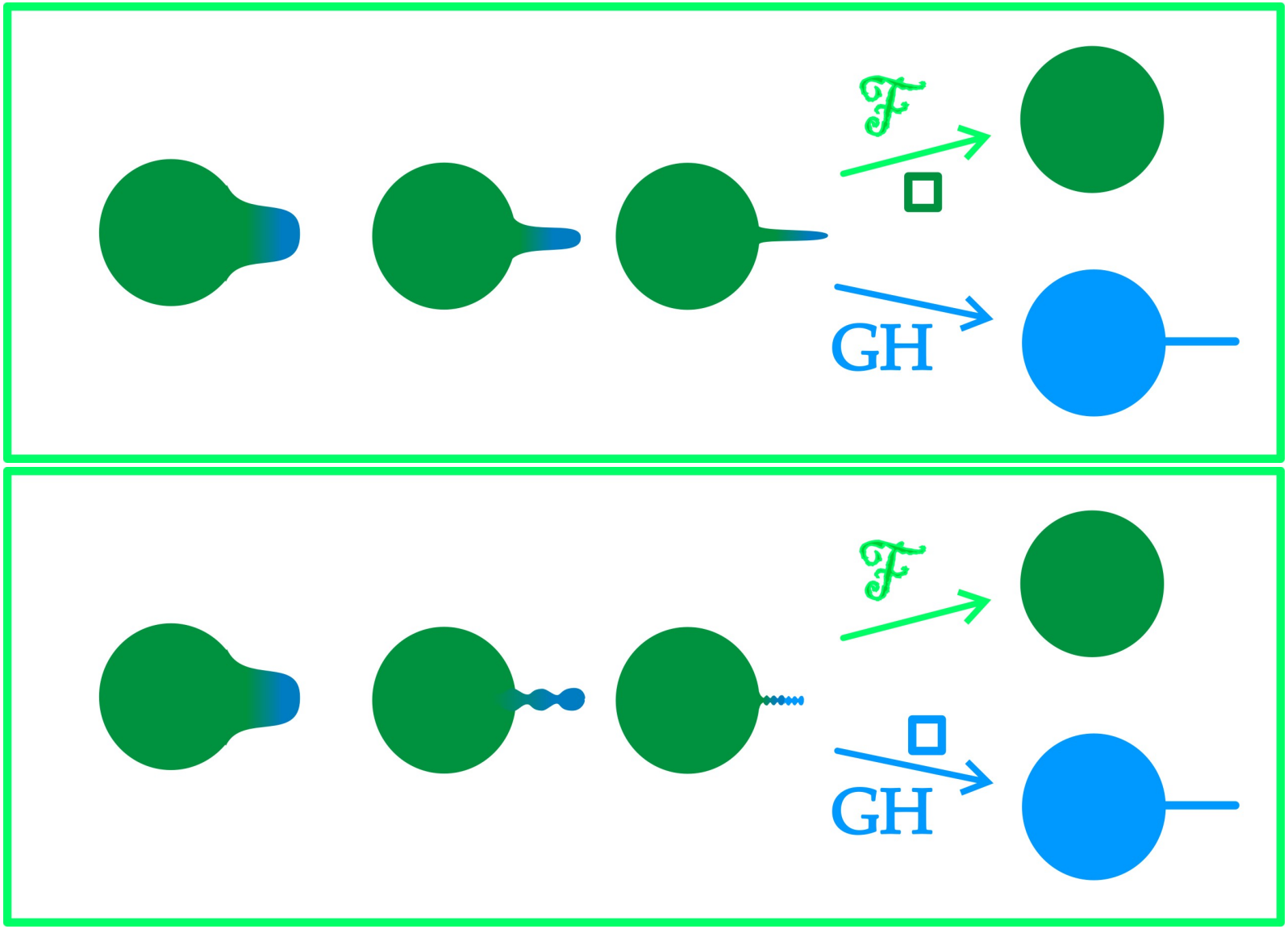

Note also that limits under Gromov's Square convergence are not always countably $\mathcal{H}^k$ rectifiable.

Gromov-Hausdorff to Intrinsic Flat Convergence

Theorem [S-W]: If M_j^k are oriented Riemannian manifolds with

$$\mathrm{vol}(M_j) \leq V_1 \text{ and } \mathrm{vol}(\partial M_j) \leq V_2$$

such that $M_j^k \xrightarrow{\mathrm{GH}} Y$, where Y is compact, then a subsequence of the M_j^k converge in the intrinsic flat sense to an integral current space $M^k = (X, d_X, T)$ such that $X \subset Y$ and $d_X = d_Y$.

Proof: by Ambrosio-Kirchheim and Gromov Compactness Thms

Cor [S-W]: When $M_j^k \xrightarrow{\mathrm{GH}} Y$ and the dimension of Y is $< k$, then the intrinsic flat limit must be the zero integral current space, 0.

This is called *collapsing*.

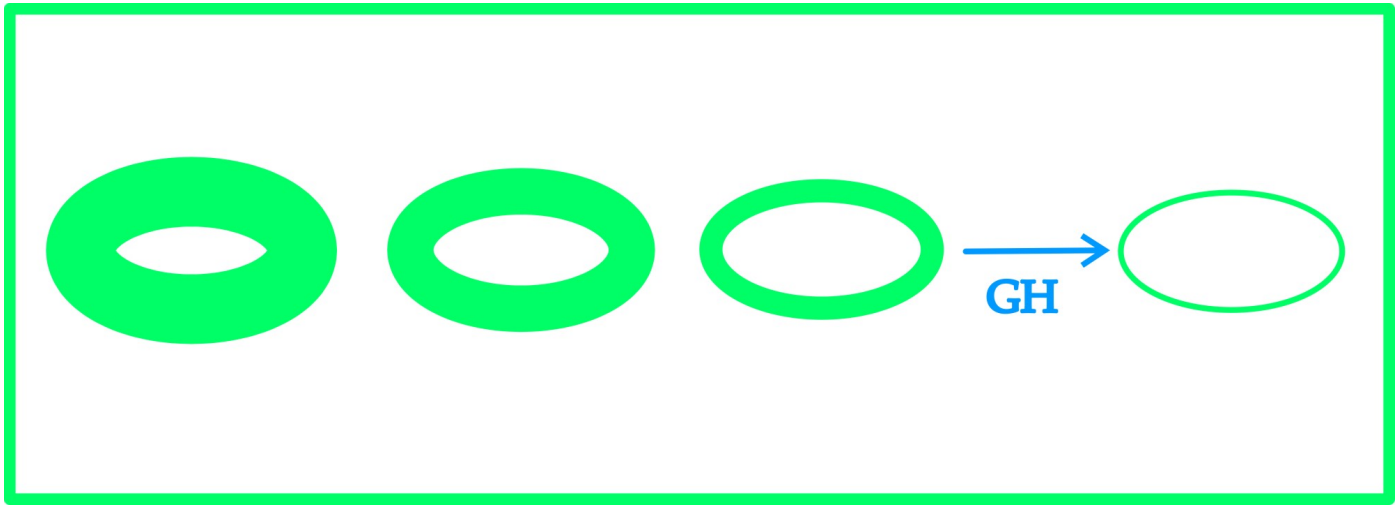

Cancellation

Integral currents in Euclidean space may also disappear due to cancellation:

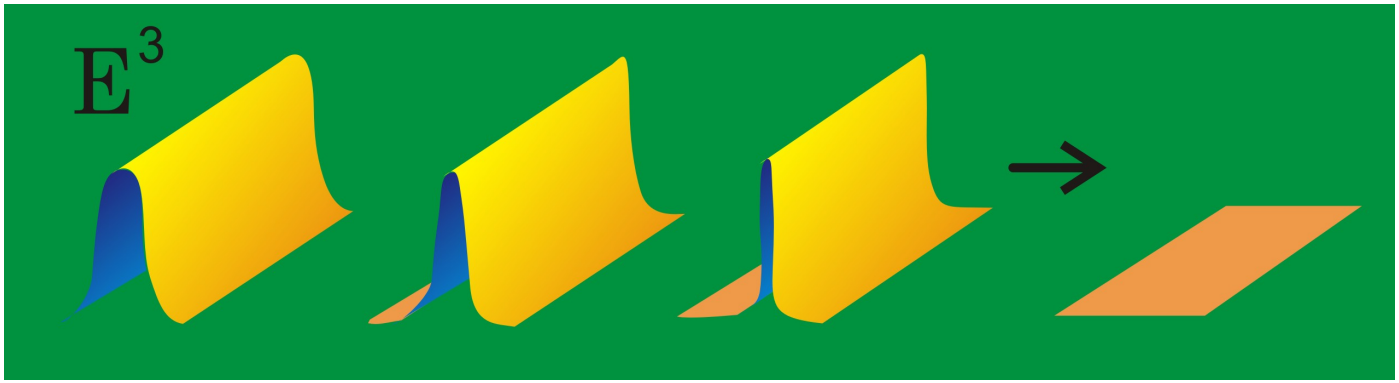

Note in this E^3 example the embedding is not isometric.

Cancellation of integral current spaces can be seen in examples with many small tunnels between two sheets:

Notice the increasing topology in these examples...

Avoiding Cancellation

Gromov, Greene-Petersen: When M_j^k have a uniform linear geometric contractibility function and $Vol(M_j^k) \leq V_1$ then a subsequence converges in the Gromov-Hausdorff sense to Y.

Theorem [S-W]: In this setting the Gromov-Hausdorff and Intrinsic Flat limits agree: $M_j^k \xrightarrow{\mathrm{GH}} Y$ and $M_j^k \xrightarrow{\mathcal{F}} (X, d, T)$ implies $Y = X$. In particular the Gromov-Hausdorff limit is countably $\mathcal{H}^k$ rectifiable.

Gromov, Cheeger-Colding: When a sequence of manifolds, M_j^k, have $\mathrm{Ricci}(M_j^k) \geq 0$, $\mathrm{vol}(M_j^k) \geq V_0 > 0$ and $\mathrm{diam}(M_j^k) \leq D$ then a subsequence converges in the Gromov-Hausdorff sense to a countably $\mathcal{H}^k$ rectifiable metric space, Y.

Theorem [S-W]: In this setting the Gromov-Hausdorff and Intrinsic Flat limits agree: $M_j^k \xrightarrow{\mathrm{GH}} Y$ and $M_j^k \xrightarrow{\mathcal{F}} (X, d, T)$ implies $Y = X$. This is a new perspective on Cheeger-Colding.

Menguy: no uniform geometric contractibility in this setting.

Examples with positive scalar curvature

Example: We construct M_j^3 with positive scalar curvature and $vol(M_j^3) \geq V > 0$ such that $M_j^3 \xrightarrow{\mathrm{GH}} S^3$ but $M_j^3 \xrightarrow{\mathcal{F}} \mathbf{0}$.
Each M_j^3 is a pair of standard spheres with Gromov-Lawson tunnels running between them. As j increases we have more and more tinier tunnels evenly placed about the spheres.
Example: We construct M_j^3 with positive scalar curvature and $vol(M_j^3) \geq V > 0$ such that $M_j^3 \xrightarrow{\mathrm{GH}} S^3$ and $M^3 \xrightarrow{\mathcal{F}} (S^3, d, 2T)$ with multiplicity 2.
This construction is as above except that we glue the tunnels with a twist so that the two copies of S^3 have the same orientation as they come together.
Conjecture: We believe this cancellation cannot occur if we take sequences of manifolds with positive scalar curvature and no interior minimal surfaces. Regions may disappear as in the hairy sphere due to collapse but not cancellation.

Filling Volumes and Cancellation:

When T_j are flat converging sequences in Euclidean space, the spheres of cancelling balls are the boundaries of currents of small mass:

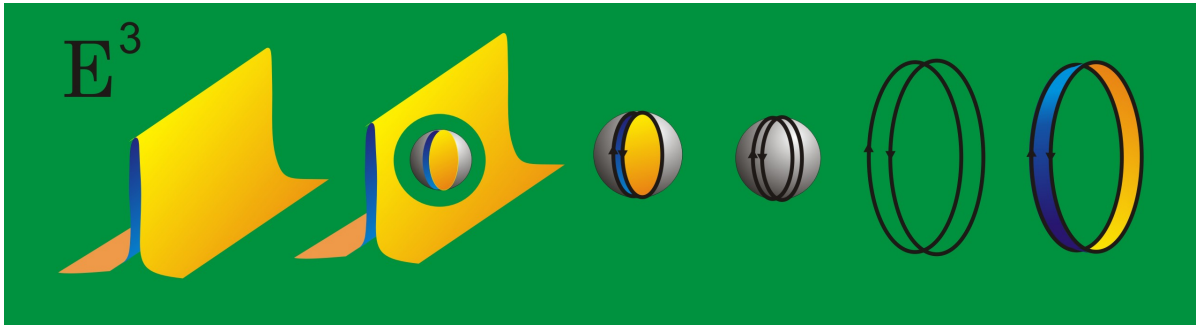

When M_j are intrinsic flat converging sequences of manifolds, the spheres of cancelling balls have small filling volumes:

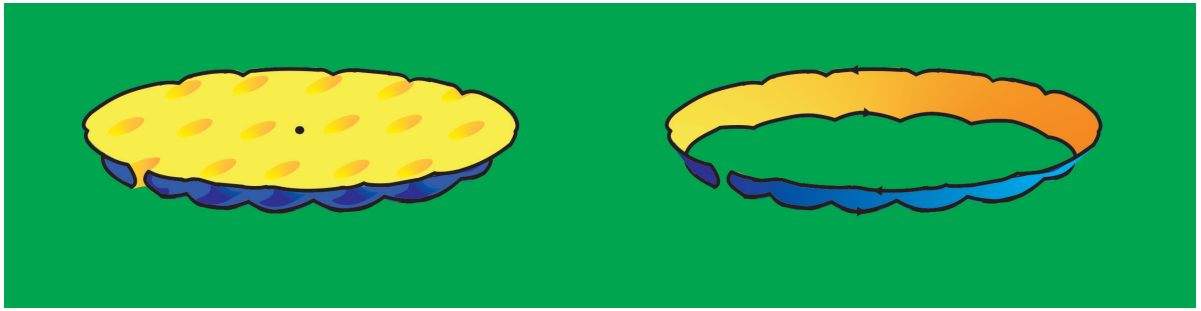

This is made rigorous using Ambrosio-Kirchheim's Slicing Theorem.

Avoiding Cancellation with Linear Contractibility

Greene-Petersen: If M_j^k have $\mathrm{vol}(M_j^k) \leq V$ and a *uniform geometric contractibility function*, ρ, such that

$$\textit{any ball } B_p(r) \subset M_j^k \textit{ is contractible in } B_p(\rho(r)) \subset M_j^k,$$

then $\mathrm{vol}(B_p(r)) \geq V(r) > 0$. So a subsequence $M_j^k \xrightarrow{\mathrm{GH}} Y$:

In fact they prove Gromov's Filling Volume of $\partial(B_p(r))$ is $\geq Cr^k$ when $rho(r)$ is linear.

Theorem [S-W]: If ρ is linear, then a subsequence $M_{j_i}^k \xrightarrow{\mathcal{F}} M^k = (X, d, T)$ where $X = Y$. In particular the Gromov-Hausdorff limit is countably $\mathcal{H}^k$ rectifiable.

Proof Idea: We apply the Filling Volume estimate to prove $\mathrm{set}(T) = Y$.

Example [Schul-Wenger]: If ρ is not linear, then the Gromov-Hausdorff limit space need not be countably $\mathcal{H}^k$ rectifiable.